elluré™

2005--

Model ESL

baby lock®

CONTENTS

CHAPTER 1

SETTING UP

.....4
PRINCIPAL PARTS 4
FLAT-BED ATTACHMENT 5
Removing the flat-bed attachment.....5
Accessory compartment 5
ADDITIONAL ACCESSORIES.....6
OPTIONAL ACCESSORIES 7
POWER SUPPLY 8
CONTROLS 9
Selections keys.....9
Operation buttons 9
LCD screen.....10
Foot controller.....10
LCD DENSITY 11
Adjusting the density with the Operation Guide 11
Adjusting the density with the main power switch, if the LCD is extremely light or dark...12
DISPLAY LANGUAGE 13
PRESSER FEET / FEED DOGS.....14
Changing the presser foot 14
Installing the presser foot holder.....15
Raising/lowering the feed dogs.....15
Installing the presser foot adapter & the optional walking foot 16
Installing the optional side cutter 17
FABRIC/THREAD/NEEDLE COMBINATIONS....19
NEEDLE.....20
Checking the needle 20
Changing the needle.....20
BOBBIN WINDING / LOWER THREADING 21
Winding the bobbin 21
Installing the bobbin.....23
UPPER THREADING.....24
Threading the upper thread 24
Needle threader 26
Pulling up the bobbin thread 27
Extra spool pin 27
Net 27
FOOT CONTROLLER.....28

CHAPTER 2

SEWING

.....29
STITCH SELECTION.....29
Selecting a utility stitch 29
Selecting a stitch with the stitch guide ( ) 29
Stitch width and length reference chart 31
STITCH WIDTH & LENGTH 33
Adjusting the stitch width and needle position...33
Adjusting the stitch length.....33
THREAD TENSION 34
Correct tension 34
Adjusting the upper thread tension.....34
OPERATION GUIDE (OPERATION GUIDE).....35
AUTOMATIC REVERSE/REINFORCEMENT STITCHING.....36
AUTOMATIC THREAD CUTTING 37
BASIC SEWING.....38
Sewing using the straight stitch (left needle position) 38
USEFUL SEWING SKILLS 40
Sewing corners 40
Sewing thick seams 40
Sewing curves 40
Sewing thick fabric.....41
Sewing thin fabric 41
Using the needle plate 42

CHAPTER 3

UTILITY STITCHES

.....43
BASIC STITCHING 43
Reinforced stitching of stretch fabric.....43
DART SEWING.....44
GATHERING.....45
ZIPPER INSERTING (CENTER AND SIDE APPLICATIONS).....46
Inserting a centered zipper 46
Inserting a side zipper.....47
PINTUCK SEWING.....49
FLAT-FELL SEAM SEWING.....50
BASTING 51
ZIGZAG STITCHING 52
Overcasting with a zigzag stitch 52
Appliqué sewing with a zigzag stitch 52
Patchwork (crazy quilt) stitching 52
OVERCASTING 53
Sewing with , or 53
Sewing with , or 53
BLIND HEMSTITCHING 54
Adjusting the needle position.....55
BUTTONHOLE STITCHING 56
Sewing order of buttonholes 58
Sewing stretch fabrics.....58
Odd-shaped buttons that do not fit into the button guide plate 59
Adjusting the buttonhole width.....59
Adjusting the stitch length of the buttonhole..59
BAR TACK STITCHING.....60
Sewing bar tacks on thick fabrics 61
Adjusting the bar tack width.....61
Adjusting the stitch length of the bar tack.....61
DARNING.....62
Adjusting the darning width.....63
Adjusting the stitch length of the darning.....63
Darning stitch cycle.....63
TAPE ATTACHING 64
EYELET STITCHING.....65
BUTTON SEWING.....66
Attaching two-hole buttons 66
Attaching four-hole buttons.....67
Attaching a shank to the button 67
APPLIQUÉ STITCHING.....68
Sewing around corners of the appliqué 68
APPLIQUÉ QUILT STITCHING 69
Sample patterns for appliqué quilts 69
SCALLOP STITCHING 70
SMOCKING STITCHING 71
PATCHWORK STITCHING 72
FAGOTING 73

DECORATIVE STITCHING 74
Shell tuck stitching 74
HEIRLOOM STITCHING 75
Hemstitching with 75
Hemstitching with 76

CHAPTER 4

EMBROIDERING

....77
SETUP 77
Installing embroidery foot Q 77
Installing the embroidery unit 78
Initializing the embroidery unit 78
Embroidery screen 79
Removing the embroidery unit 79
Creating beautiful embroidery 80
Attaching stabilizer material 80
Inserting the fabric in the embroidery frame ..81
Attaching the embroidery frame to the embroidery arm 83
Removing the embroidery frame from the embroidery arm 83
EMBROIDERING 84
Simple embroidering 84
Embroidering multi-color patterns 84
EMBROIDERY PATTERNS 86
Creating text patterns 86
Typing uppercase & lowercase characters 88
Changing the character size 88
Changing thread density of the stitch on characters and some frame patterns 89
Checking the text 89
Editing text 90
Changing the color of each character in the text ...90
Creating frame patterns 91
Selecting one-point patterns 92
Displaying the thread color names 93
Selecting patterns from a memory card 93
CHANGING THE PATTERN SETTINGS 95
Editing the layout of the pattern 95
Changing the embroidery pattern position 96
Changing the pattern direction 97
Mirror imaging patterns 97
Embroidering from a specific starting point 98
Checking the embroidery area 98
Changing the size of patterns 99
MEMORY 100
Saving character combinations in the memory 100
Retrieving a pattern which has been saved.101
ADJUSTMENT WHILE EMBROIDERING 102
Continuing embroidering 102
Embroidering again from the beginning 103
EMBROIDERY APPLICATIONS 104
Linking characters 104
Using the extra-large embroidery frame (optional) 105
Combining a frame pattern with a design 109
Embroidering appliqués (using a frame pattern) 110
Embroidering onto small pieces of fabric or in corners 111

MAINTENANCE

....112
CLEANING 112
Cleaning the screen 112
Cleaning the machine surface 112
Cleaning the shuttle 112
CHANGING THE LIGHT BULB 114

ERROR MESSAGES

....115
Warning messages 115
Operation messages 118
Troubleshooting 119
Thread and stitch problems 120
Mechanical problems 121

SEWING CHART

....122

PATTERNS (PROGRAMMED IN MACHINE)

....125
Utility stitches 125
Character embroidering 125
Frame pattern embroidering 126
One-point pattern embroidering 126

FLAT-BED ATTACHMENT

Removing the flat-bed attachment

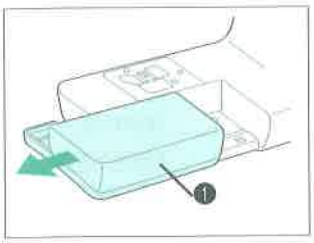

With the flat-bed attachment removed, sewing tubular pieces, such as sleeves and pant legs, or hard-to-reach areas of the garment is easier. To remove the flat-bed attachment, pull it straight out to the left of the sewing machine.

❶ Flat-bed attachment

Accessory compartment

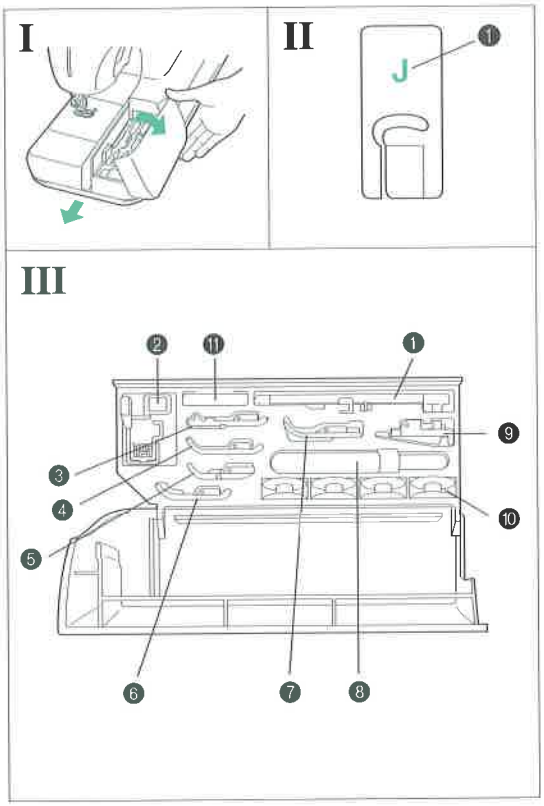

I To open the accessory compartment, tilt its lid toward you.

II Each presser foot is marked with a letter.
❶ Presser foot code

III Compartment accessories
The location of each accessory is shown in figure III. Only use the accessories designed for this machine.

No.	Part Name	Part Code
❶	Buttonhole foot **A**	X57789-101
❷	Embroidery foot **Q**	XA5500-001
❸	Overcasting foot **G**	X51162-001
❹	Monogramming foot **N**	X53840-301
❺	Zipper foot **I**	X59370-051
❻	Zigzag foot **J**	137748-101
❼	Blind hem foot **R**	X56409-001
❽	Seam ripper	X54243-001
❾	Button sewing foot **M**	130489-001
❿	Bobbins*	136492-101
⓫	Needle set	X58358-001

ESG-BOB

*Only use the plastic bobbins supplied in the accessory compartment or as additional accessories.

OPTIONAL ACCESSORIES

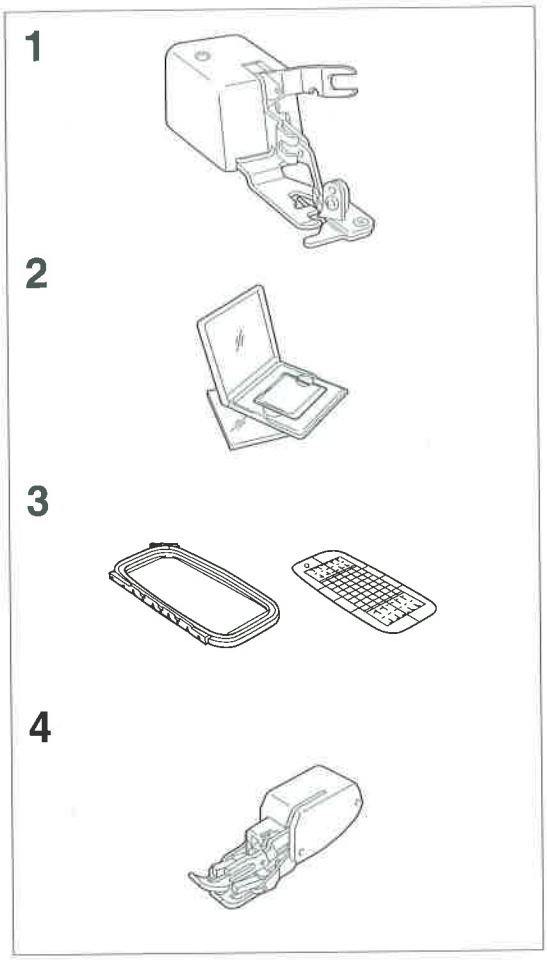

No.	Part Name	Part Code
1	Side cutter	X80943-001
2	Embroidery cards[a]	
	No. 3 Dinosaur	BLEC-3
	No. 6 Moskowitz's World	BLEC-6
	No. 7 Country Life	BLEC-7
	No. 8 Holiday	BLEC-8
	No. 9 Hobby Craft	BLEC-9
	No. 10 Monogram Emblem	BLEC-10
	No. 11 Frame	BLEC-11
	No. 12 Transportation	BLEC-12
	No. 13 Sports Emblem	BLEC-13
	No. 14 Large Floral	BLEC-14
	No. 15 Cute Kids	BLEC-15
	No. 16 Dogs & Cats	BLEC-16
	No. 19 Marine	BLEC-19
	No. 20 Petite Designs	BLEC-20
	No. 21 Needlework	BLEC-21
	No. 23 White on white	BLEC-23
	No. 24 Nursery Rhyme	BLEC-24
	No. 25 Equestrian	BLEC-25
	No. 27 Birds	BLEC-27
	No. 28 Christmas	BLEC-28
	No. 29 Lace	BLEC-29
	No. 30 Wildlife animals	BLEC-30
	No. 31 Large flower II	BLEC-31
	No. 32 Musical instrument	BLEC-32
	No. 33 Trees	BLEC-33
	No. 35 Cats & dogs II	BLEC-35
	No. 36 Fruits & vegetables	BLEC-36
	No. 37 Appliqué alphabet	BLEC-37
	No. 38 Angel	BLEC-38
	No. 39 Doll face	BLEC-39
	No. 40 Sports 3	BLEC-40
	No. 41 Renaissance	BLEC-41
	No. 42 Farm	BLEC-42
	No. 43 Victorian	BLEC-43
	No. 44 Lace II	BLEC-44
	No. 45 Chain Stitch	BLEC-45
	No. 46 Australian Animal	BLEC-46
	No. 47 Butterfly	BLEC-47
	No. 48 Australian Flower	BLEC-48
	No. 49 Folk Art	BLEC-49
	No. 50 Fairy and Floral	BLEC-50
3	Embroidery frame set (extra-large)[b]	EF60
4	Walking foot[c]	X81064-001

[a] This unit cannot be used together with memory card BLEC-S1.

WARNING
Embroidery cards purchased in other countries may not be compatible with your machine.

[b] Refer to page 105 through 108 for details on embroidering using the extra-large embroidery frame.
[c] When using the walking foot, refer to page 16.

CONTROLS

Selection keys

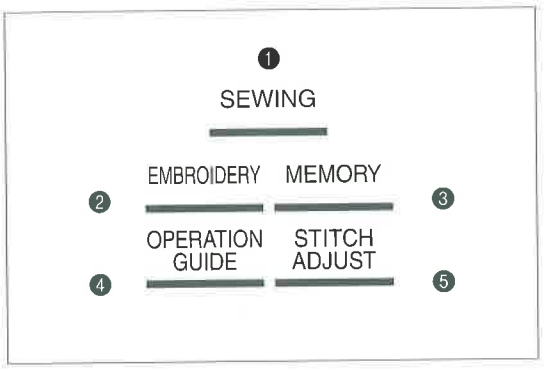

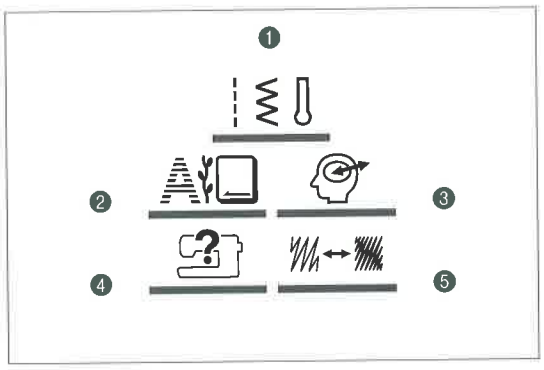

❶ **SEWING** key
Press this key to display a screen that allows you to select utility stitches for sewing straight stitches, buttonholes, etc. (Refer to page 29 for details.)

❷ **EMBROIDERY** key
When the embroidery unit is installed, press this key to display a screen that allows you to select letters and other decorative designs for embroidering. (Refer to page 86 for details.)

❸ **MEMORY** key
When the embroidery unit is installed, press this key to display a screen that allows you to store or retrieve embroidery pattern combinations. (Refer to pages 100 and 101 for details.)

❹ **OPERATION GUIDE** key
When the embroidery unit is not installed, press this key to see information on how to use machine functions such as upper threading, bobbin winding and bobbin thread setting. (Refer to page 35 for details.)

❺ **STITCH ADJUST** (stitch adjustment) key
When the embroidery unit is not installed, press this key to display a screen that allows you to change the stitch width and length, and the thread tension. (Refer to pages 33 and 34 for details.) When the embroidery unit is installed, press this key to display a screen that allows you to change the thread density of some embroidery patterns. (Refer to page 89 for details.)

Operation buttons

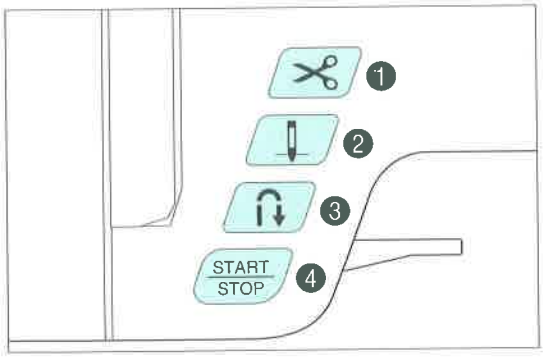

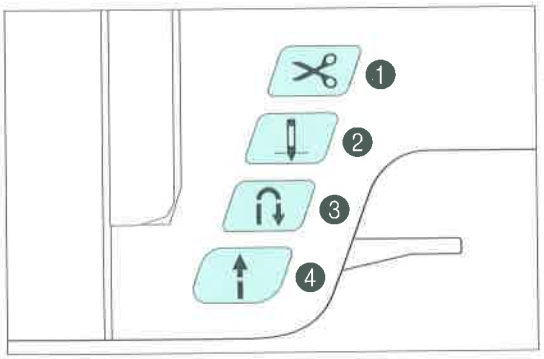

❶ Thread cutter button
Press this button to cut both the upper and the bobbin threads automatically.

❷ Needle position button
Press this button to raise or lower the needle.

❸ Reverse/reinforcement stitch button
Press this button to secure the end of the stitching by sewing either reverse stitches or reinforcement stitches. Reverse stitches (straight stitches only) are sewn by stitching in the reverse direction. Reinforcement stitches (most other stitches) are made by sewing three stitches on top of each other.

❹ Start/stop button
Press this button to start or stop sewing. The needle drops to its lowest position when the machine is stopped. To sew at a low speed, keep this button pressed.
This button lights up in green when the machine is ready to start sewing and while it is sewing or embroidering. If the machine is not ready to start sewing, the button lights up in red. The button lights up in orange when the bobbin winder shaft is moved to the right in order to wind the bobbin thread onto the bobbin.

Adjusting the density with the Operation Guide

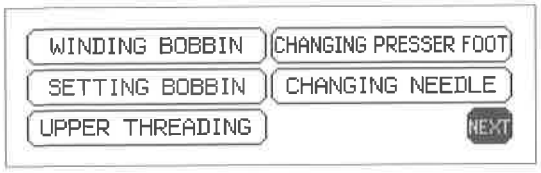

1. Press the **OPERATION GUIDE** key.
2. Press the **NEXT** key.

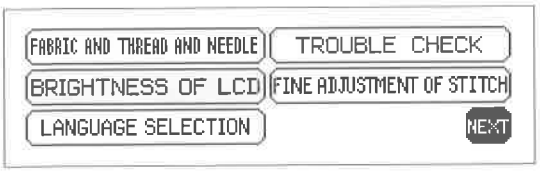

3. Press the **BRIGHTNESS OF LCD** key.

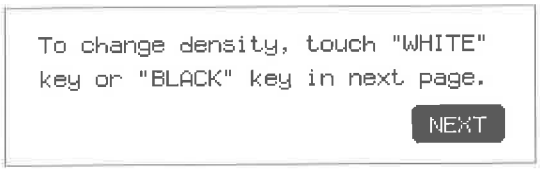

4. Press the **NEXT** key.

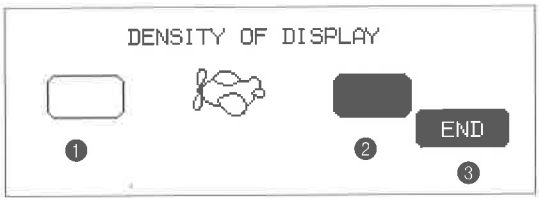

5. Adjust the density of the LCD.
   To make the LCD lighter, press the white key.
   To make the LCD darker, press the black key.
   The density of the LCD changes each time one of these keys is pressed.
   1. Press this key to make the density lighter.
   2. Press this key to make the density darker.
   3. Press this key to finish adjusting the density.
6. After making the adjustment, press the **END** key.

DISPLAY LANGUAGE

You can easily change the language of all the keys and messages displayed on the LCD.

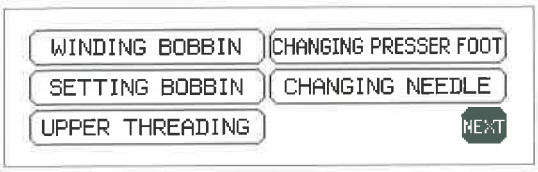

1. Press the **OPERATION GUIDE** key.
2. Press the **NEXT** key.

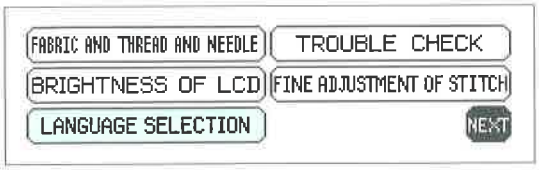

3. Press the **LANGUAGE SELECTION** key.

4. Press the **NEXT** key until the desired language is displayed.

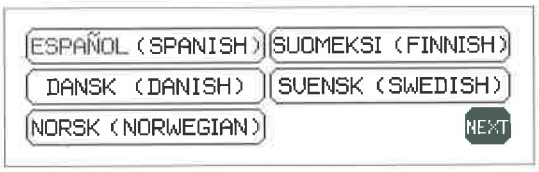

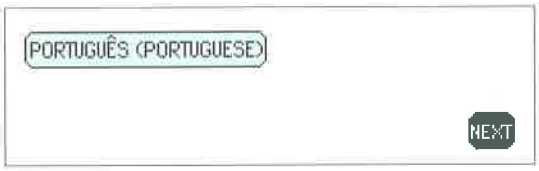

5. Press the key of the desired language. The language of all keys and messages displayed in the LCD are changed.

Note

- When the display language is changed, error messages will also be displayed in the selected language.
- The display language can be set to one of 11 languages (English, German, French, Italian, Dutch, Spanish, Danish, Norwegian, Finnish, Swedish and Portuguese).

CAUTION

- **This function should not be used as a translation function.**
- **Even when the sewing machine is turned off, the current language setting will be retained.**

Installing the presser foot holder

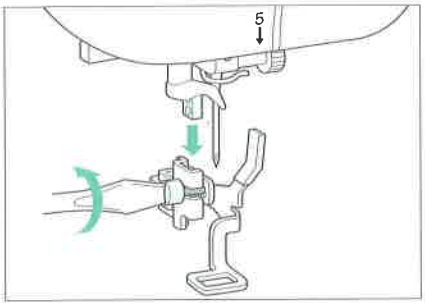

1. Press the needle position button to raise the needle, and then turn off the sewing machine.
2. Raise the presser foot lever.
3. Remove the currently installed presser foot.

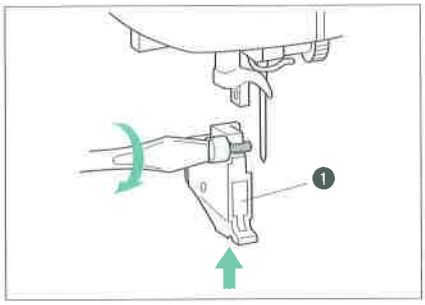

4. Slide the bracket on the presser foot holder up onto the presser foot bar, and then fasten it by firmly tightening the screw with the enclosed screwdriver or disc-shaped screwdriver.
   ❶ Presser foot holder

CAUTION
Be careful not to touch the tip of the needle, otherwise injuries may occur.

Note
If the presser foot holder is not installed correctly, the thread tension may not be tight enough due to an improper presser foot height.

Raising/lowering the feed dogs

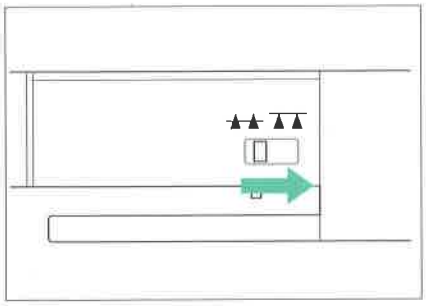

With the accessory compartment removed, the feed dog position switch can be seen at the base of the machine. To lower the feed dogs, for example when sewing buttons, slide the lever to the right. To continue sewing while the feed dogs feed the fabric, slide the lever to the left.

Note
When the embroidery unit is attached to the sewing machine, the feed dogs are automatically lowered.

Installing the optional side cutter

By installing the side cutter, you can cut the fabric while sewing, for example when sewing an overcasting stitch. To use the side cutter, select a pattern that displays on the LCD, and then press so that it appears as .

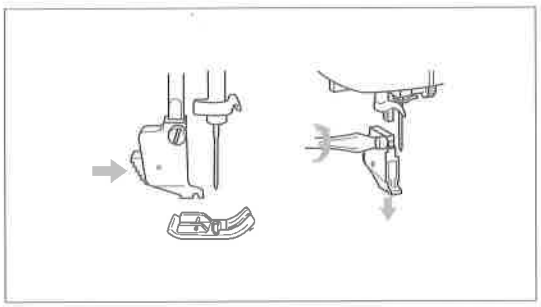

1. Press the needle position button to raise the needle, and then turn off the sewing machine.
2. Raise the presser foot lever.
3. Remove the installed presser foot and the presser foot holder.

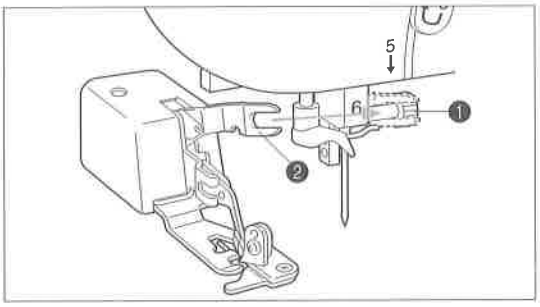

4. Securely hook the connecting fork of the side cutter onto the needle clamp screw.
   ❶ Needle clamp screw
   ❷ Connecting fork

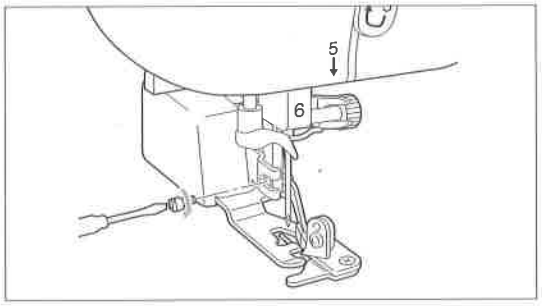

5. While lifting the presser foot up, insert the screw (for securing presser foot) through the notch in the side cutter's bracket and into the hole in the presser foot bar, and then lightly tighten the screw. Lower the presser foot lever, and then firmly tighten the screw with the enclosed screwdriver or disc-shaped screwdriver.

6. Select a pattern, and then press so that it appears as . Other necessary adjustments for using the side cutter will be carried out automatically.

Note

Pressing so that it changes back to turns off the side cutter operation.

FABRIC/THREAD/NEEDLE COMBINATIONS

Select the appropriate thread and needle for the fabric that you are using.

Application		Thread		Size of needle
		Type	Size	
Medium weight fabric	Broad cloth	Cotton	60-80	11-14
	Taffeta	Synthetic mercerized	60-80	
	Flannel, Gabardine	Silk	50-80	
Thin fabric	Lawn	Cotton	60-80	9-11
	Georgette	Synthetic mercerized	60-80	
	Challis, Satin	Silk	50-80	
Thick fabric	Denim	Cotton	30-50	14-16
	Corduroy	Synthetic mercerized	50	
	Tweed	Silk	50	
Stretch fabric	Jersey	Thread for knits		Golden needle 11-14
	Tricot			
For top stitching		Synthetic mercerized	30	14-16
		Silk	30	

Note

- For sewing on the popular variety of stretch fabrics, for embroidering and for decorative stitch sewing, the golden needle should be used.
- There are many different types of needles to suit a variety of sewing needs. Therefore, be sure to select the correct needle for your specific sewing application, for example when sewing denim or when sewing with metallic thread.

BOBBIN WINDING / LOWER THREADING

Winding the bobbin

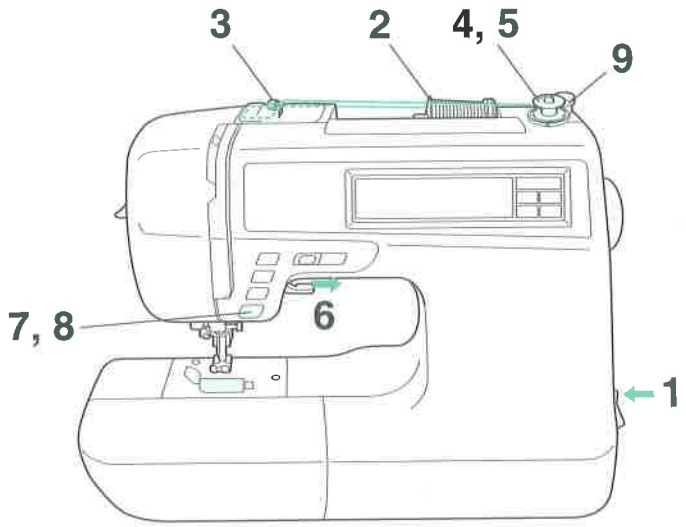

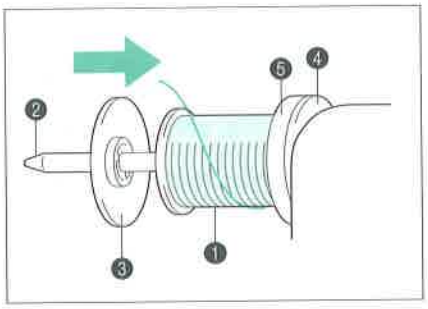

1. Plug the machine into the power supply and turn on the main power switch.

2. Place the spool on the spool pin so that the thread unrolls from the bottom front of the spool. Then, secure the spool on the spool pin using a spool cap with the size closest to the spool size.

Note
Make sure that the spool cap at the base of the spool pin and the spool pad are correctly installed.

❶ Spool
❷ Spool pin
❸ Spool cap
❹ Spool cap
❺ Spool pad

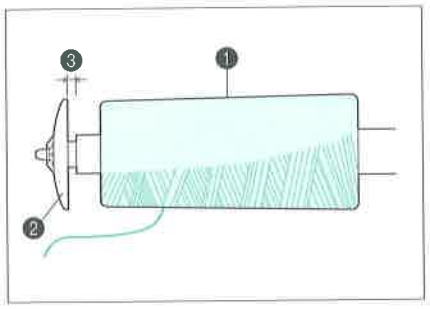

Note
If using fine thread such as cross-wound thread, leave some space between the spool cap (small) and the spool of thread.

❶ Cross-wound thread
❷ Spool cap (small)
❸ Gap

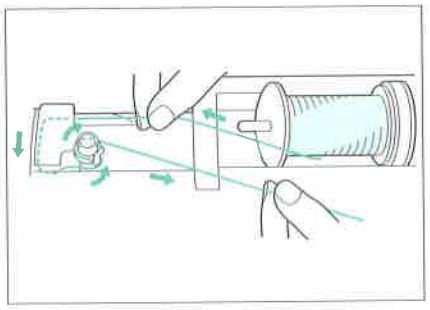

3. While holding the spool thread with your right hand, use your left hand to pass the thread through the guides as shown.

Installing the bobbin

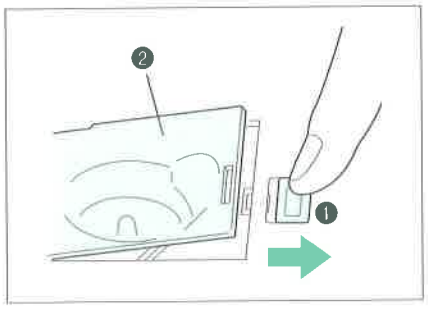

1. Slide the bobbin cover latch to the right, and then remove the bobbin cover.
   ❶ Bobbin cover latch
   ❷ Bobbin cover

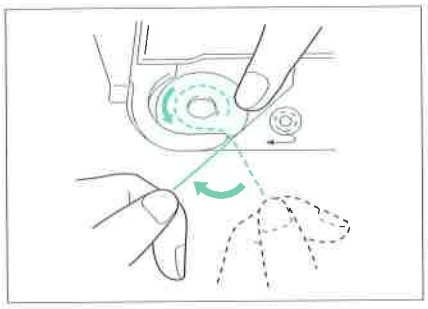

2. Insert the bobbin into the shuttle so that the thread unrolls as shown in the illustration.

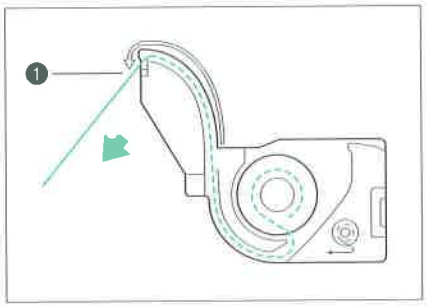

3. Guide the thread through the groove, then pull the thread toward you to cut off any excess.
   ❶ Built-in thread cutter

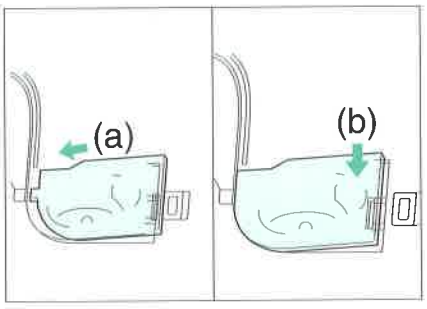

4. Reattach the bobbin cover by inserting the left end (a) and pressing down lightly on the right end so that it snaps into place (b).

Note
You can begin sewing without pulling up the bobbin thread.

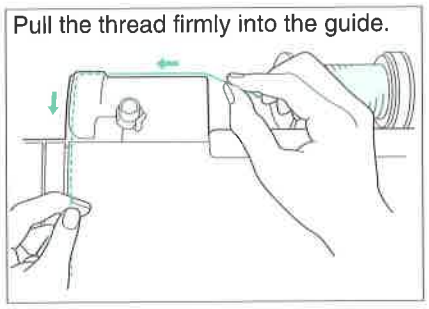

4. While holding the spool thread with your right hand, use your left hand to keep the thread taut while passing it through the guides as shown.

Note
Incorrect threading may cause damage.

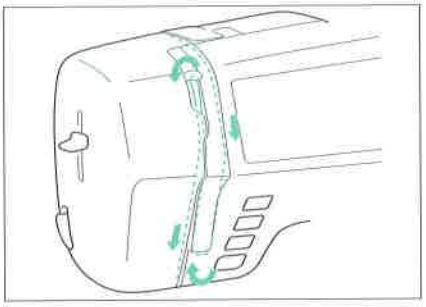

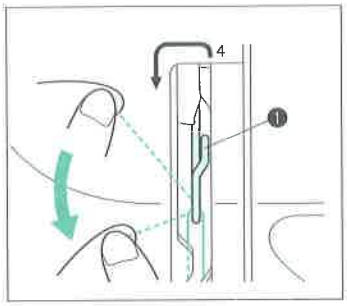

❶ Thread take-up lever

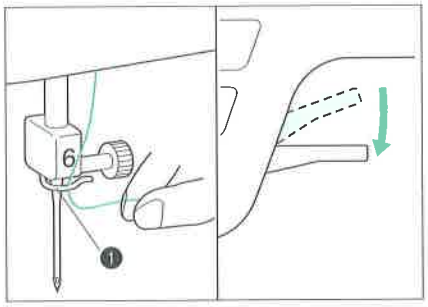

5. Pass the thread through the wire loop, and then lower the presser foot lever.
   ❶ Wire loop

Note
Lowering the presser foot lever engages the auto thread tension unit, allowing you to pull the thread taut as you continue. Be sure to raise the presser foot lever before removing the upper thread, otherwise the auto thread tension unit may be damaged.

6. Thread the needle manually or using the needle threader. (Refer to page 26 for more details on using the needle threader.)

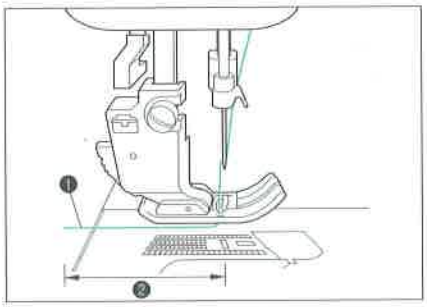

7. Pass the thread underneath the presser foot, and then pull about 2" (5.0 cm) of the upper thread out toward the rear of the machine.
   ❶ Upper thread
   ❷ 2" (5.0 cm)

Note
You can begin sewing without pulling up the bobbin thread.

Pulling up the bobbin thread

At some times, for example when making gathers, you may want to pull up the bobbin thread.

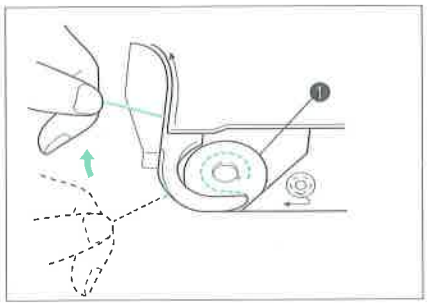

1. Raise the presser foot lever.
2. Remove the bobbin cover, and insert the bobbin into the shuttle so that the thread unrolls as shown in the illustration.
3. Guide the thread through the groove, and then leave it there without cutting it.
   ❶ Bobbin

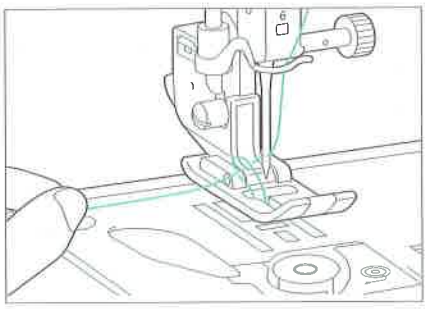

4. With the bobbin cover still removed, hold the upper thread, press the needle position button twice, and then pull up the bobbin thread.
5. Pull about 2" (5.0 cm) of the bobbin thread out toward the rear of the machine and reattach the bobbin cover.

Extra spool pin

When embroidering with metallic thread, use the extra spool pin in order to prevent the thread from twisting as it unrolls from the spool.

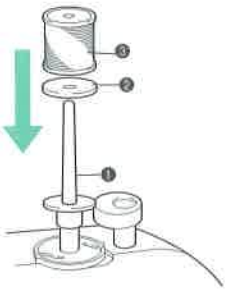

Note
When using metallic thread, we recommend using a 90/14 home sewing machine needle.

1. Insert the extra spool pin onto the end of the bobbin winder shaft.
2. Place the spool felt on the spool pin.
3. Place the spool of thread on the spool pin so that the thread unrolls from the front of the spool.
4. Thread the upper thread.
   ❶ Insert the extra spool pin onto the end of the bobbin winder shaft.
   ❷ Spool felt
   ❸ Spool of thread

Net

When using special threads that quickly wind off the spool, place a net over the spool before sewing. Be sure to cut the net to match the size of the spool.

❶ Net
❷ Spool
❸ Spool pin
❹ Spool cap

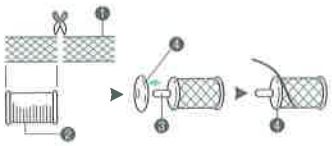

STITCH SELECTION

Selecting a utility stitch

This sewing machine is equipped with 78 built-in utility stitches.

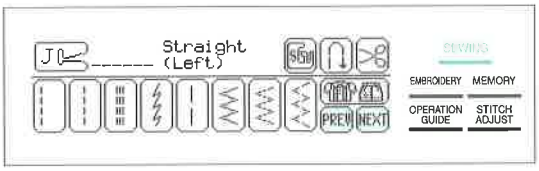

1. Press the **SEWING** key.
2. Press the **PREV** or **NEXT** key until the desired stitch is displayed.
3. Press the key for the stitch that you wish to use.

For details on sewing using the selected utility stitch, refer to page 43.

Selecting a stitch with the stitch guide ( )

The stitch guide can provide beginning sewers with help in selecting the appropriate stitch for the desired sewing application. An example of how the stitch guide can be used is shown below.

Example: To select a stitch for sewing a buttonhole on a shirt

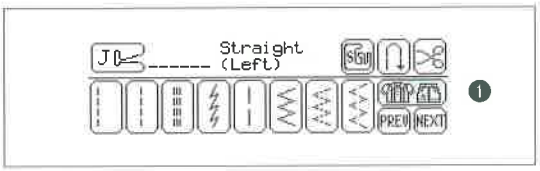

1. If the utility stitch screen is not already displayed, press the **SEWING** key.
2. Press .
   1 Press this key to display more sewing applications.

3. Press the **BUTTONHOLE** key.

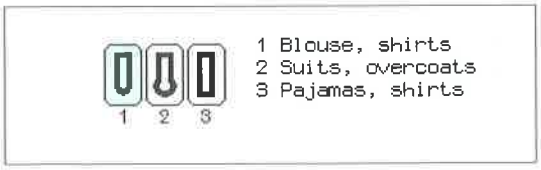

4. Press to select the buttonhole stitch for a shirt.

5. Follow the instructions, and then press the **NEXT** key.

Stitch width and length reference chart

STITCH	Stitch width [mm (inch)] Auto	Stitch width [mm (inch)] Manual	Stitch length [mm (inch)] Auto	Stitch length [mm (inch)] Manual
Straight (Left needle position)	[0.0 (0)]	0.0–7.0 (0–9/32)	2.5 (3/32)	0.2–5.0 (1/128–13/64)
Straight (Middle needle position)	–	–	2.5 (3/32)	0.2–5.0 (1/128–13/64)
Triple Stretch	[0.0 (0)]	0.0–7.0 (0–9/32)	2.5 (3/32)	1.5–3.5 (15/256–3/32)
Stretch	1.0 (3/64)	1.0–3.0 (5/128–1/8)	2.5 (3/32)	1.0–4.0 (5/128–5/32)
Basting	0.0 (0)	0.0–7.0 (0–9/32)	20 (25/32)	5–30 (13/64–1-3/16)
Zigzag	3.5 (9/64)	0.0–7.0 (0–9/32)	1.4 (14/256)	0.0–4.0 (0–5/32)
Elastic zigzag	5.0 (13/64)	1.5–7.0 (15/256–9/32)	1.0 (5/128)	0.2–4.0 (1/128–5/32)
	5.0 (13/64)	1.5–7.0 (15/256–9/32)	1.0 (5/128)	0.2–4.0 (1/128–5/32)
Overcasting	3.5 (9/64)	2.5–5.0 (3/32–13/64)	2.0 (1/16)	1.0–4.0 (5/128–5/32)
	5.0 (13/64)	2.5–5.0 (3/32–13/64)	2.5 (3/32)	1.0–4.0 (5/128–5/32)
	5.0 (13/64)	0.0–7.0 (0–9/32)	2.5 (3/32)	0.5–4.0 (5/256–5/32)
	5.0 (13/64)	3.5–5.0 (9/64–13/64)	2.5 (3/32)	1.0–4.0 (5/128–5/32)
	5.0 (13/64)	0.0–7.0 (0–9/32)	2.5 (3/32)	0.5–4.0 (5/256–5/32)
	4.0 (5/32)	0.0–7.0 (0–9/32)	4.0 (5/32)	1.0–4.0 (5/128–5/32)
Blind hem	0.0 (0)	+3 – –3	2.0 (5/64)	1.0–3.5 (5/128–9/64)
Buttonhole	5.0 (13/64)	3.0–5.0 (1/8–13/64)	0.4 (1/64)	0.2–1.0 (1/128–5/128)
	5.0 (13/64)	3.0–5.0 (1/8–13/64)	0.4 (1/64)	0.2–1.0 (1/128–5/128)
	5.0 (13/64)	3.0–5.0 (1/8–313/64)	0.4 (1/64)	0.2–1.0 (1/128–5/128)
	5.0 (13/64)	3.0–5.0 (1/8–13/64)	0.4 (1/64)	0.2–1.0 (1/128–5/128)
	6.0 (15/64)	3.0–6.0 (1/8–15/64)	1.0 (5/128)	0.5–2.0 (5/256–5/64)
	6.0 (15/64)	3.0–6.0 (1/8–15/64)	1.5 (15/256)	1.0–3.0 (5/128–1/8)

STITCH	Stitch width [mm (inch)] Auto	Stitch width [mm (inch)] Manual	Stitch length [mm (inch)] Auto	Stitch length [mm (inch)] Manual
	5.0 (13/64)	0.0–6.0 (0–15/64)	2.0 (5/64)	0.2–5.0 (1/128–13/64)
	7.0 (9/32)	3.0–7.0 (1/8–9/32)	0.5 (5/256)	0.3–1.0 (3/256–5/128)
Bar tack	2.0 (5/64)	1.0–3.0 (5/128–1/8)	0.4 (1/64)	0.3–1.0 (3/256–5/128)
Darning	7.0 (9/32)	2.5–7.0 (3/32–9/32)	2.0 (5/64)	0.4–2.5 (1/64–3/32)
Tape attaching	4.0 (5/32)	0.0–7.0 (0–9/32)	1.0 (5/128)	0.2–4.0 (1/128–5/32)
Eyelet	7.0 (9/32)	5.0 6.0 7.0 (13/64–9/32)	7.0 (9/32)	5.0 6.0 7.0 (13/64–9/32)
Button sewing	3.5 (9/64)	2.5–4.5 (3/32–11/64)	–	–
Applique	3.5 (9/64)	2.5–7.0 (3/32–9/32)	2.5 (3/32)	1.6–2.5 (1/16–3/32)
Scallop	5.0 (13/64)	2.5–7.0 (3/32–9/32)	0.4 (1/64)	0.1–1.0 (1/256–5/128)
Smocking	5.0 (13/64)	1.5–7.0 (15/256–9/32)	1.6 (1/16)	0.2–4.0 (1/128–5/32)
Patchwork	5.0 (13/64)	2.5–7.0 (3/32–9/32)	2.5 (3/32)	1.0–3.5 (5/128–9/64)
	4.0 (5/32)	0.0–7.0 (0–9/32)	1.2 (3/64)	0.2–4.0 (1/128–5/32)
	5.0 (13/64)	0.0–7.0 (0–9/32)	1.2 (3/64)	0.2–4.0 (1/128–5/32)
Fagoting	5.0 (13/64)	0.0–7.0 (0–9/32)	2.5 (3/32)	2.5–4.0 (3/32–5/32)
	5.0 (13/64)	2.5–7.0 (3/32–9/32)	2.5 (3/32)	1.0–3.5 (5/128–9/64)
Applique	1.5 (15/256)	0.5–3.5 (5/256–9/64)	1.4 (14/256)	0.8–4.0 (1/32–5/32)

–: Non-adjustable

STITCH WIDTH & LENGTH

Adjusting the stitch width and the needle position

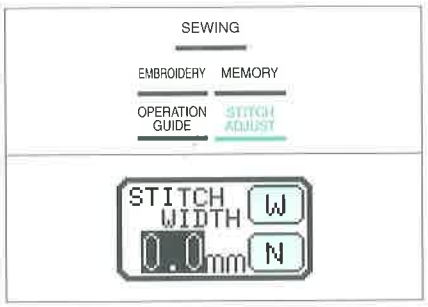

Adjusting the stitch width

1. Select a stitch, and then press the STITCH ADJUST key.
2. To make the stitch wider, press the STITCH WIDTH key [W] (wider).
3. To make the stitch narrower, press the STITCH WIDTH key [N] (narrower).

Adjusting the needle position

1. Select the straight stitch (left needle position).
2. To move the needle toward the right, press the STITCH WIDTH key [W] (wider).
3. To move the needle toward the left, press the STITCH WIDTH key [N] (narrower).
4. The needle position setting changes each time one of these keys is pressed.
5. After the adjustment, press the END key.

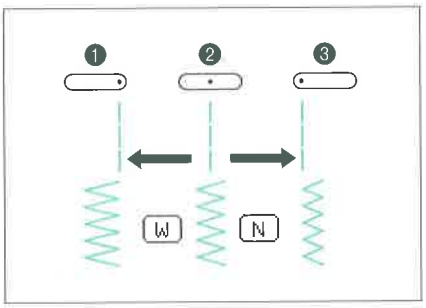

Note

- The needle position cannot be changed for the straight stitch (center needle position) ( ).
- The default stitch width setting for the selected stitch is highlighted in black.

❶ Needle moved toward the right (wider stitch)
❷ Needle positioned in the center (standard stitch width)
❸ Needle moved toward the left (narrower stitch)

Adjusting the stitch length

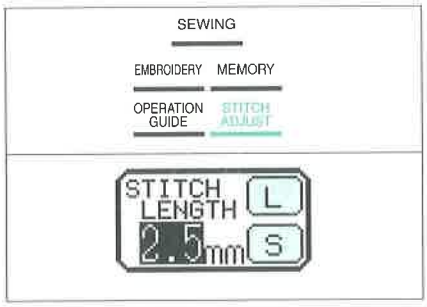

1. Select a stitch, and then press the **STITCH ADJUST** key.
2. Adjust the stitch length.
   To increase the stitch length, press the **STITCH LENGTH** key [L] (longer).
   To decrease the stitch length, press the **STITCH LENGTH** key [S] (shorter).
   The stitch length setting changes each time one of these keys is pressed.
3. After making the adjustment, press the **END** key.

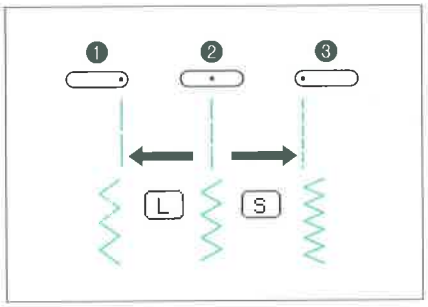

Note

- When sewing straight stitches with 4.5 mm or 5.0 mm length setting on fabric less than 5/128″ (1.0 mm) thick, the stitch length automatically adjusts to 5/32″ (4.0 mm) at the start of sewing in order to prevent gathering.
- The default stitch length setting for the selected stitch is highlighted in black.

❶ Longer stitch
❷ Medium stitch length
❸ Shorter stitch

OPERATION GUIDE

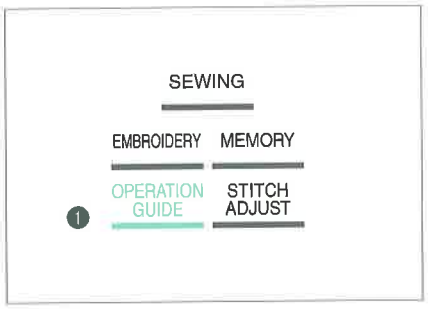

This sewing machine is equipped with a convenient guide that displays information and instructions on various operations, such as bobbin winding, upper threading, and LCD adjustment, making this machine easy to use.

Example: To display the instructions for installing the bobbin

1. Press the **OPERATION GUIDE** key.
   ❶ **OPERATION GUIDE** key

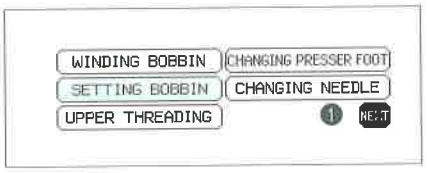

2. Press the **SETTING BOBBIN** key.
   ❶ Press the **NEXT** key to display more options.

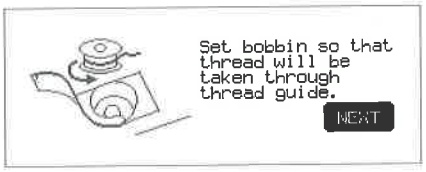

3. Follow the instructions, and then press the **NEXT** key.

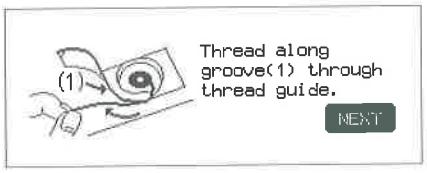

4. Follow the instructions, and then press the **NEXT** key.

5. Follow the instructions, and then press the **END** key.

AUTOMATIC THREAD CUTTING

Before sewing, turn on automatic thread cutting to cut the threads automatically at the end of sewing. This function is convenient when sewing buttonholes and bar tacks.

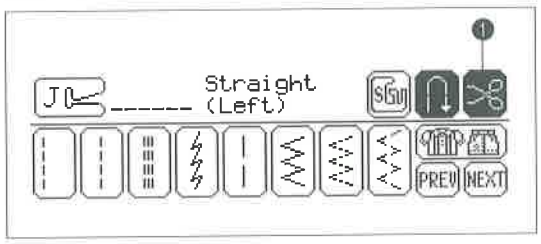

1. Select a stitch.

2. Turn on automatic thread cutting by pressing so that it appears as .
   ❶ Automatic thread cutting turned on

Note
- Automatic reverse/reinforcement stitching must also be used when automatic thread cutting is turned on.
- Pressing so that it changes back to turns off automatic thread cutting.

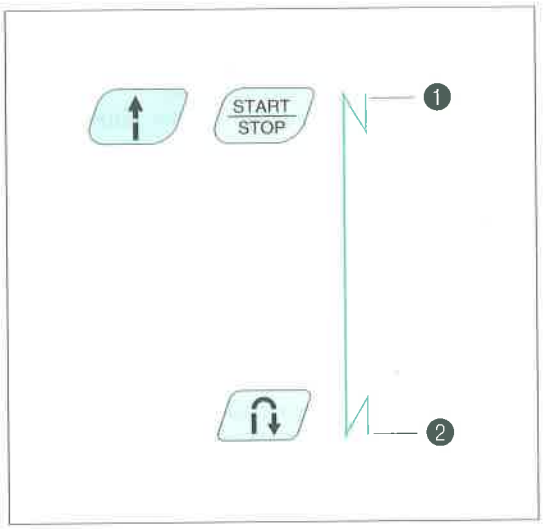

3. Press the start/stop button.
   ❶ Reverse/reinforcement stitches are sewn, and then sewing starts.

Note
If the start/stop button had been pressed to pause sewing, the beginning reverse/reinforcement stitches are not sewn.

4. When the end of the stitching is reached, press the reverse/reinforcement stitch button to sew reverse/reinforcement stitches, stop sewing, and cut the threads.
   ❷ Reverse/reinforcement stitches are sewn, sewing stops, and then the threads are cut automatically.

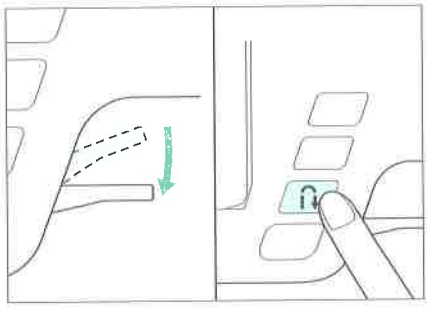

4. Lower the presser foot lever.

5. Press the reverse/reinforcement stitch button to sew reverse stitches, and then press the start/stop button. The machine starts sewing at slow speed.

Note

- To pause sewing in order to turn or adjust the fabric, press the start/stop button. To restart sewing, press the start/stop button again.
- If automatic reverse/reinforcement stitching is turned on before you start sewing, pressing just the start/stop button automatically sews reverse/reinforcement stitches before sewing.

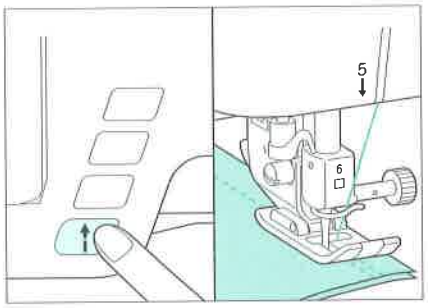

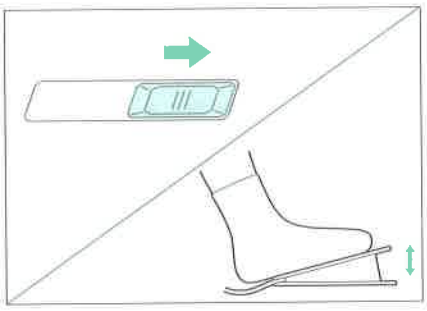

6. Adjust the sewing speed using either the sewing speed controller or the foot controller.

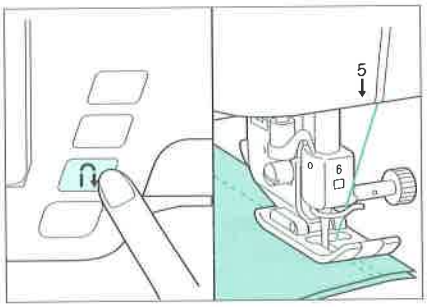

7. When the end of the stitching is reached, press the reverse/reinforcement stitch button to sew reverse stitches and stop the machine.

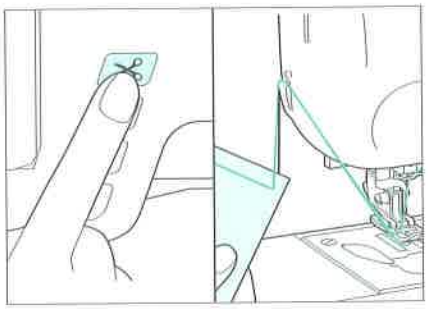

8. Press the thread cutter button to cut the threads.

Note

- Cut thick thread (thicker than #30) with the cutter on the side of the machine as shown.
- If automatic thread cutting and automatic reverse/reinforcement stitching are turned on before you start sewing, pressing the reverse/reinforcement stitch button at the end of the stitching automatically sews reverse/reinforcement stitches, trims the threads and stops the machine.

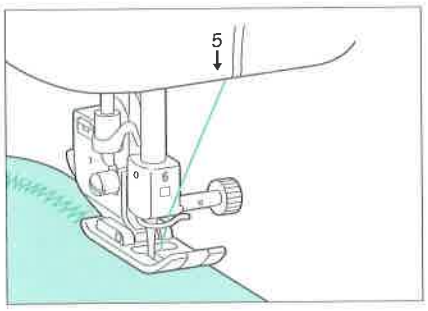

Sewing a curve with a zigzag stitch
Select a short stitch length in order to obtain a fine stitch and sew slowly while keeping the seam parallel with the fabric edge as you guide the fabric around the curve.

Note
For sharp corners, temporarily stop sewing while keeping the needle in the material, raise the presser foot lever, and then carefully turn the fabric while keeping the fabric edge aligned with the side of the presser foot. Lower the presser foot lever and continue sewing.

Sewing thick fabric

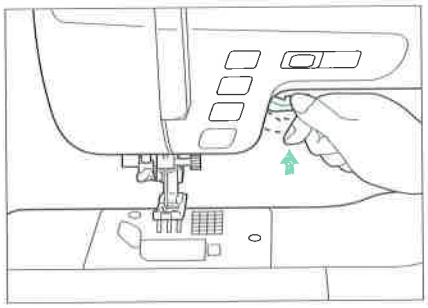

1. Raise the presser foot lever, and then raise it even higher so thicker fabrics can be placed under the presser foot.

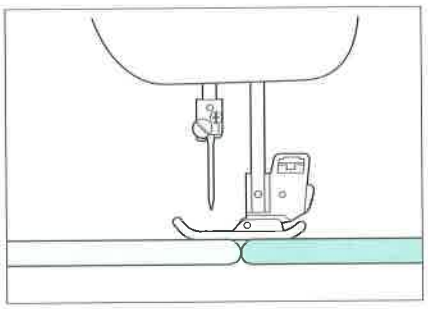

2. If the fabric does not feed at the beginning of sewing, place a piece of folded fabric or cardboard under the back of the presser foot to raise it.

Sewing thin fabric

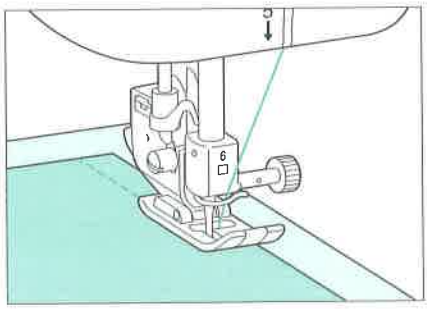

Place thin paper or stabilizer material under the fabric before sewing.

BASIC STITCHING

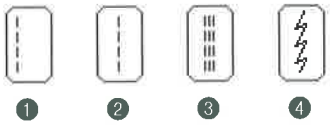

❶ **Straight (Left)** [straight stitch (left needle position)]: for normal sewing
❷ **Straight (Mid)** [straight stitch (center needle position)]: for normal sewing
❸ **Triple stretch stitch**: for reinforced stitching
❹ **Stretch stitch**: for sewing stretch fabric

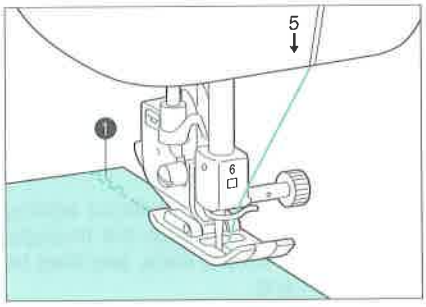

1. Baste or pin together the fabric pieces before sewing, attach presser foot **J**, and lower the presser foot lever.

2. Press the reverse/reinforcement stitch button to sew reverse/reinforcement stitches, and then press the start/stop button to continue sewing.
   ❶ Reverse stitches at beginning

Note
- Be sure to place the edge of the fabric at least 3 to 4 stitch lengths behind the presser foot so that the reverse/reinforcement stitches can be sewn.
- If automatic reverse/reinforcement stitching is turned on before you start sewing, pressing just the start/stop button automatically sews reverse/reinforcement stitches before sewing.

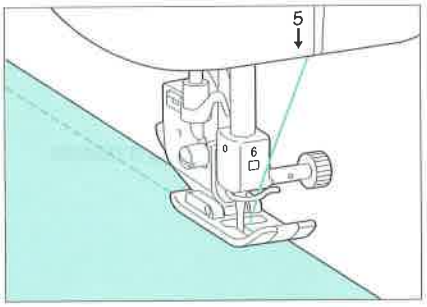

3. Slow down the sewing speed near the end of the stitching, and then press the reverse/reinforcement stitch button to sew reverse/reinforcement stitches and stop the machine.

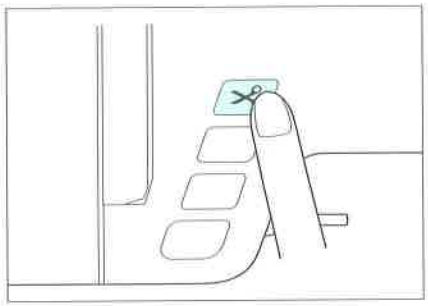

4. Press the thread cutter button to cut the threads.

Note
If automatic thread cutting and automatic reverse/reinforcement stitching are turned on before you start sewing, pressing the reverse/reinforcement stitch button at the end of the stitching automatically sews reverse/reinforcement stitches, trims the threads and stops the machine.

Reinforced stitching of stretch fabric

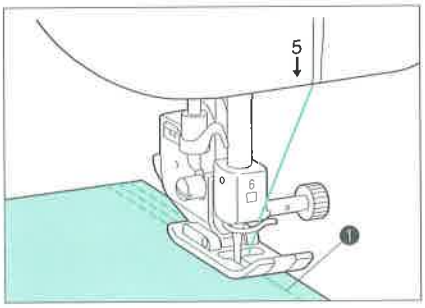

Baste the fabric beforehand and sew along the basting using a stretch stitch (or).

❶ Basting

Note
Do not pull the fabric while sewing.

GATHERING

Create gathers on the waists of skirts or on shirt sleeves.

❶ **Straight (Left)** [straight stitch (left needle position)]

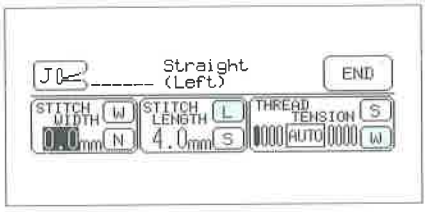

1. Set the stitch length to 5/32" (4.0 mm) and select a weak thread tension.

Note

If you pressed [icon] then **GATHERING**, the stitch length automatically adjusts to 5/32" (4.0 mm) and a weak thread tension is automatically selected.

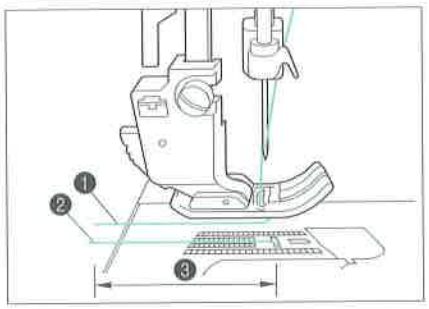

2. Attach presser foot **J**, and pull out about 2" (5.0 cm) of both the upper and bobbin threads.
   ❶ Upper thread
   ❷ Bobbin thread
   ❸ About 2" (5.0 cm)

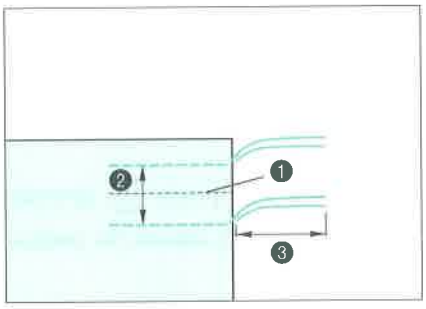

3. Turn off automatic thread cutting and automatic reverse/reinforcement stitching, sew two rows of straight stitches parallel to the seamline, and then remove the fabric from the machine, leaving about 2" (5.0 cm) of thread on the ends.
   ❶ Seamline
   ❷ 3/8" to 1/2" (1.0 to 1.5 cm)
   ❸ About 2" (5.0 cm)

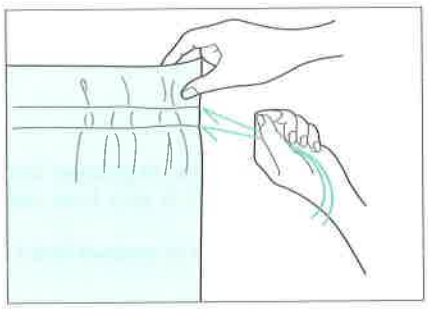

4. Pull the bobbin threads to obtain the desired amount of gather, and then tie the thread ends together.

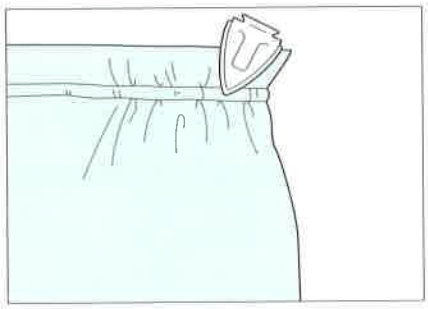

5. Smooth the gathers by ironing them.

Inserting a side zipper

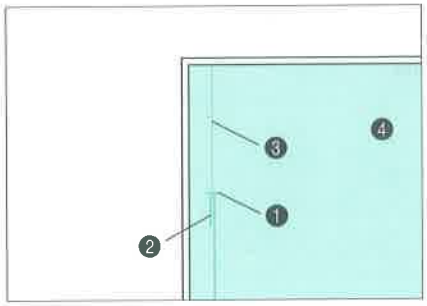

1. Attach presser foot **J**, sew straight stitches up to the zipper opening, and then sew reverse stitches. Then, select a basting stitch and continue sewing to the edge of the fabric.
   ❶ End of zipper opening
   ❷ Reverse stitches
   ❸ Basting stitch
   ❹ Wrong side of fabric

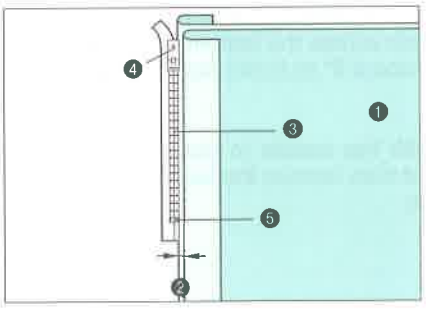

2. Press open the seam allowance and align the pressed edge with the zipper teeth, leaving 1/8" (3.0 mm) of space for the stitching.
   ❶ Wrong side of fabric
   ❷ Leave 1/8" (3.0 mm) for stitching
   ❸ Zipper teeth
   ❹ Zipper pull tab
   ❺ Zipper opening (base of zipper)

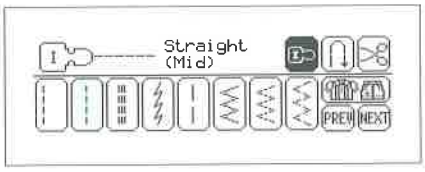

3. Select [**Straight (Mid)**], and then press (presser foot **I**). The thread tension automatically adjusts for presser foot **I**.

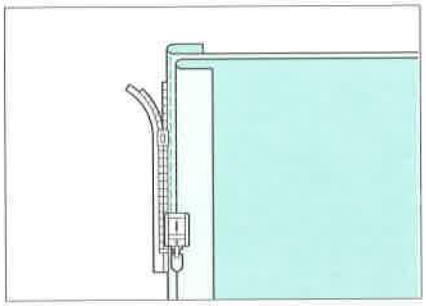

4. Attach the presser foot holder to the left pin of presser foot **I**, open the zipper, and then sew the bottom layer to the zipper from the top to base of the zipper.

Note
If automatic thread cutting and automatic reverse/reinforcement stitching are turned on before you start sewing, pressing just the start/stop button automatically sews reverse stitches before sewing. In addition, pressing the reverse/reinforcement stitch button at the end of the stitching automatically sews reverse stitches, trims the threads and stops the machine.

PINTUCK SEWING

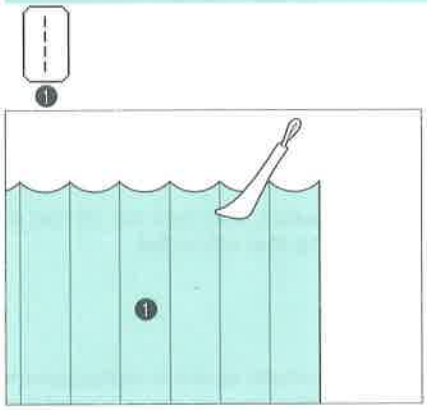

❶ **Straight (Mid)** [straight stitch (center needle position)]

1. Mark the positions of the folds on the wrong side of the fabric.
   ❶ Wrong side of fabric

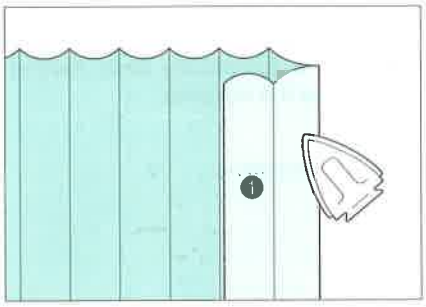

2. Fold over the fabric and iron only along the folds.
   ❶ Right side of fabric

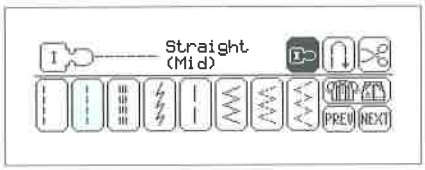

3. Press [**Straight (Mid)**], and then press (presser foot **I**). The thread tension automatically adjusts for presser foot **I**.

Note
If you pressed then **PINTUCK**, the thread tension is automatically adjusted.

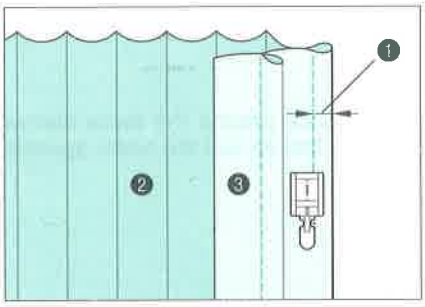

4. Attach the presser foot holder to the right pin of presser foot **I**, and sew a straight stitch along each fold.
   ❶ Width of pintuck
   ❷ Wrong side of fabric
   ❸ Right side of fabric

Note
If automatic thread cutting and automatic reverse/reinforcement stitching are turned on before you start sewing, pressing just the start/stop button automatically sews reverse stitches before sewing. In addition, pressing the reverse/reinforcement stitch button at the end of the stitching automatically sews reverse stitches, trims the threads and stops the machine.

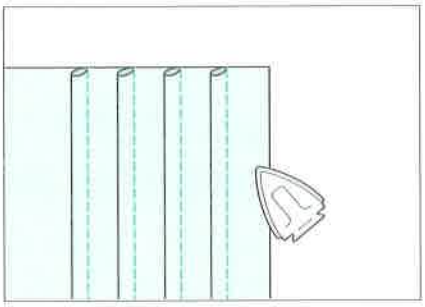

5. Iron the folds toward the same direction.

BASTING

❶ **Basting stitch**

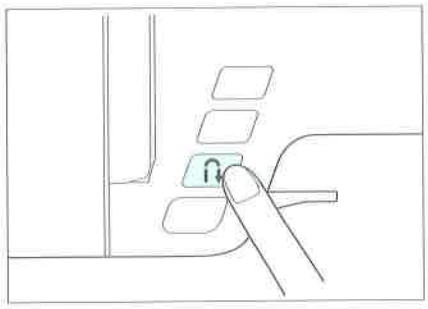

1. Attach presser foot **J** and lower the presser foot lever.
2. Press the reverse/reinforcement button to sew reinforcement stitches at the beginning of the basting.

Note

– If you will not sew reinforcement stitches, raise the presser foot lever, hold the end of the upper thread, and then turn the balance wheel toward you with your right hand to pull up the bobbin thread. Pull about 2" (5.0 cm) of both the upper and lower threads out toward the rear of the machine.
– The length of one stitch can be set between 13/64" and 1-3/16" (5.0 and 30.0 mm).

❶ Between 13/64" and 1-3/16" (5.0 and 30.0 mm)

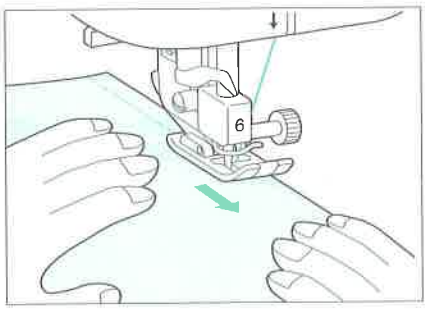

3. Sew while keeping the fabric pulled tight.
4. End the basting with reinforcement stitches.

OVERCASTING

Overcasting

1. for sewing thin and medium weight fabrics
2. for sewing thick fabrics
3. for sewing thick and medium weight stretch fabrics
4. for sewing medium weight stretch fabrics
5. for sewing stretch fabrics
6. for sewing stretch fabrics

Utility stitches that display can be sewn using the optional side cutter. For details on installing and using the side cutter, refer to page 17.

Sewing with , or

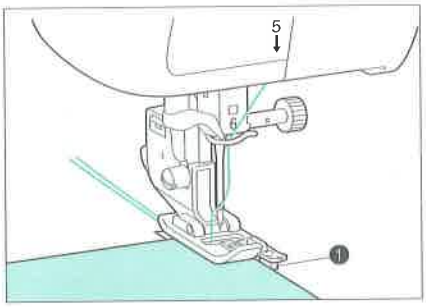

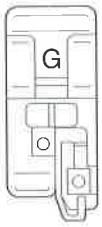

Attach presser foot **G**, lower the presser foot lever, and then sew the overcasting with the fabric edge against the guide of presser foot **G**.

1. Guide

Note

If automatic thread cutting and automatic reverse/reinforcement stitching are turned on before you start sewing, pressing just the start/stop button automatically sews reinforcement stitches before sewing. In addition, pressing the reverse/reinforcement stitch button at the end of the stitching automatically sews reinforcement stitches, trims the threads and stops the machine.

CAUTION

After the stitch width is adjusted, turn the balance wheel toward you by hand and check that the needle does not touch the presser foot. If the needle hits the presser foot and breaks, injuries may occur.

Sewing with , or

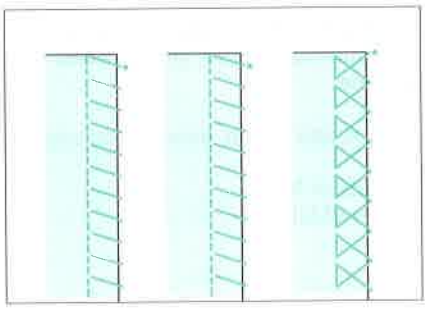

Attach presser foot **J**, and check that the needle drops slightly off the edge of the fabric before sewing.

Note

If automatic thread cutting and automatic reverse/reinforcement stitching are turned on before you start sewing, pressing just the start/stop button automatically sews reinforcement stitches before sewing. In addition, pressing the reverse/reinforcement stitch button at the end of the stitching automatically sews reinforcement stitches, trims the threads and stops the machine.

Adjusting the needle position

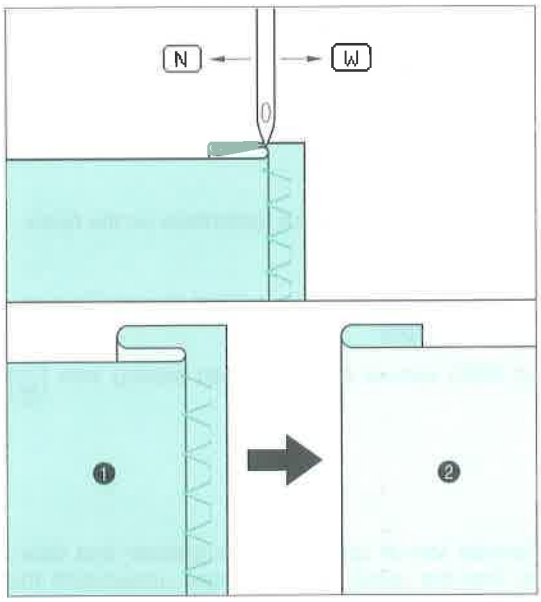

Press the **STITCH ADJUST** key, and then use the **STITCH WIDTH** keys [W] and [N] to adjust the needle position so that the needle slightly catches the fold of the hem.

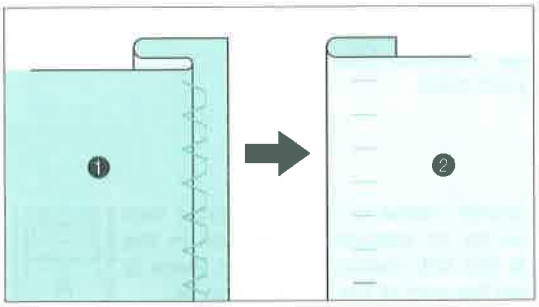

If the needle catches too much of the hem fold, press the **STITCH WIDTH** key [W] to move the needle away from the fold.

❶ Wrong side of fabric
❷ Right side of fabric

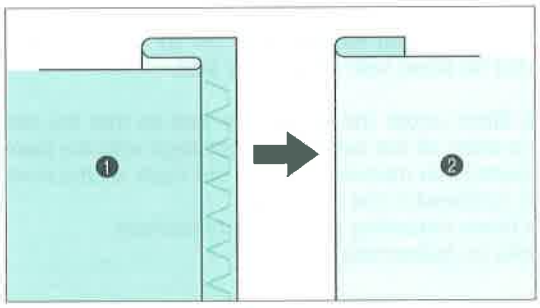

If the needle does not catch enough of the hem fold, press the **STITCH WIDTH** key [N] to move the needle closer to the fold.

❶ Wrong side of fabric
❷ Right side of fabric

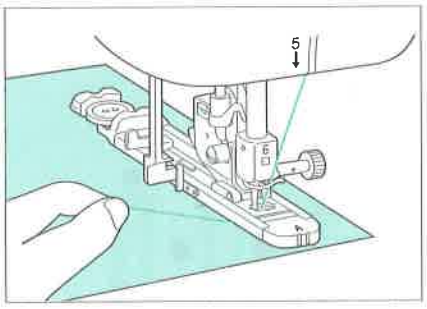

7. Gently hold the end of the upper thread, and then start sewing. Feed the fabric carefully by hand while the buttonhole is sewn. Once sewing is completed, the machine automatically sews reinforcement stitches, and then stops.

Note

- If automatic thread cutting is turned on before you start sewing, both threads are automatically cut after the reinforcement stitches are sewn.
- If the fabric does not feed (for example, because it is too thick), press the **STITCH LENGTH** key [L] to increase the stitch length.

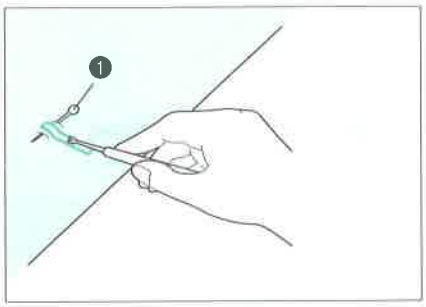

6. Cut open the buttonhole.

For normal buttonholes and rounded buttonholes:
Insert a pin along the inside of one of the bar tacks, and then insert the seam ripper into the center of the buttonhole and cut towards the pin.
❶ Pin

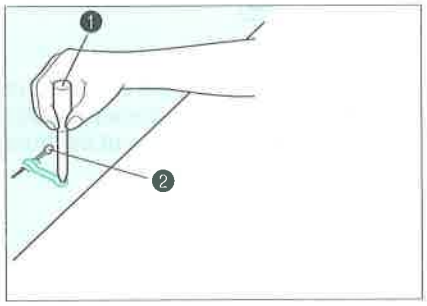

For keyhole buttonholes:
Use the eyelet punch to make a hole in the rounded end of the buttonhole. Then, insert a pin along the inside of one of the bar tacks, insert a seam ripper into the hole made with the eyelet punch, and cut towards the pin.
❶ Eyelet punch
❷ Pin

Odd-shaped buttons that do not fit into the button guide plate

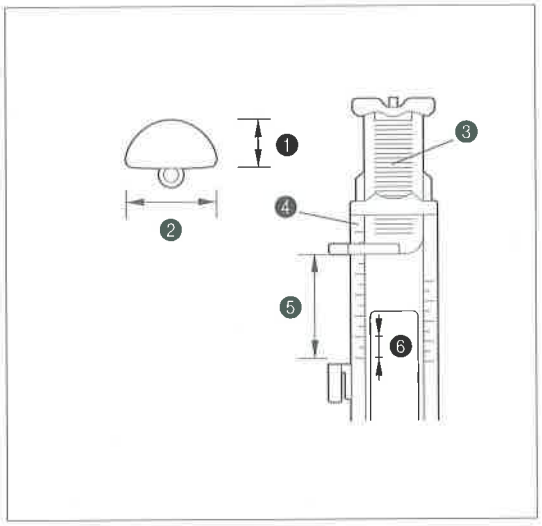

Add together the button diameter and its thickness, and then set the plate to the calculated value.

Example: For a button with a diameter of 19/32" (1.5 cm) and a thickness of 25/64" (1.0 cm), the scale should be set at 1" (2.5 cm)

1. Thickness [25/64" (1.0 cm)]
2. Diameter [19/32" (1.5 cm)]
3. Button guide plate
4. Scale
5. Diameter + thickness [1" (2.5 cm)]
6. 13/64" (0.5 cm)

Adjusting the buttonhole width

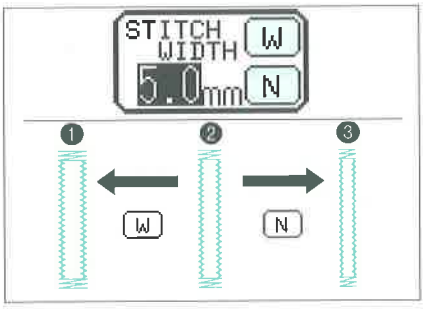

Press the **STITCH ADJUST** key, and then use the **STITCH WIDTH** keys [W] and [N] to adjust the width of the buttonhole.

1. Pressing **STITCH WIDTH** key [W] increases the width of the buttonhole.
2. Standard buttonhole width
3. Pressing **STITCH WIDTH** key [N] decreases the width of the buttonhole.

Adjusting the stitch length of the buttonhole

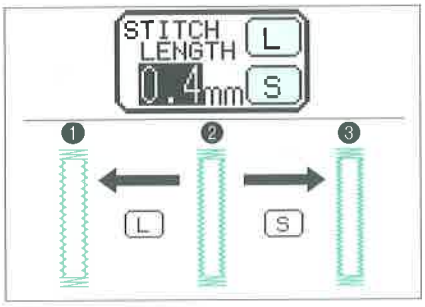

Press the **STITCH ADJUST** key, and then use the **STITCH LENGTH** keys [L] and [S] to adjust the stitch length of the buttonholes.

1. Pressing **STITCH LENGTH** key [L] lengthens the stitch length.
2. Standard buttonhole stitch length
3. Pressing **STITCH LENGTH** key [S] shortens the stitch length.

Note

If the fabric does not feed (for example, because it is too thick), press the **STITCH LENGTH** key [L] to increase the stitch length.

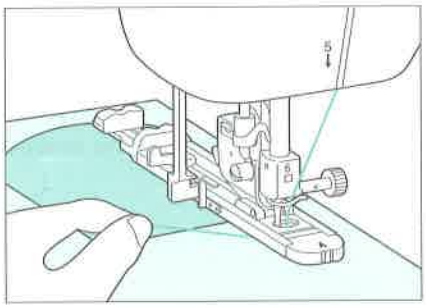

6. Gently hold the end of the upper thread, and then press the start/stop button to start the machine. Once sewing is completed, the machine automatically sews reinforcement stitches, and then stops.

Note

- If automatic thread cutting is turned on before you start sewing, both threads are automatically cut after the reinforcement stitches are sewn.
- If the fabric does not feed (for example, because it is too thick), press the **STITCH LENGTH** key [L] to increase the stitch length.

Sewing bar tacks on thick fabrics

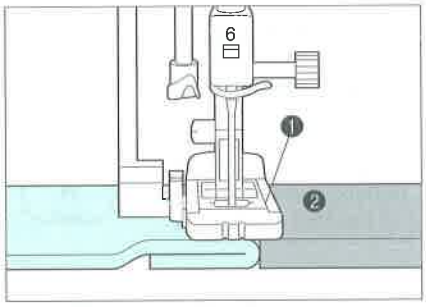

Place a piece of folded fabric or cardboard beside the fabric being sewn to level off the buttonhole foot and allow for easier feeding.

1. Buttonhole foot
2. Folded fabric or cardboard

Adjusting the bar tack width

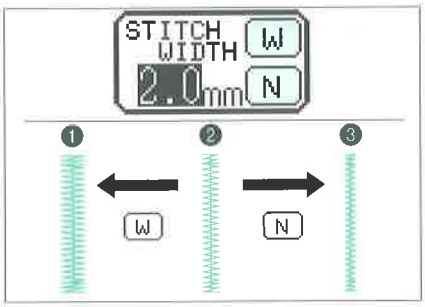

Press the **STITCH ADJUST** key, and then use the **STITCH WIDTH** keys [W] and [N] to adjust the width of the bar tack.

1. Pressing **STITCH WIDTH** key [W] increases the width of the bar tack.
2. Standard bar tack width
3. Pressing **STITCH WIDTH** key [N] decreases the width of the bar tack.

Adjusting the stitch length of the bar tack

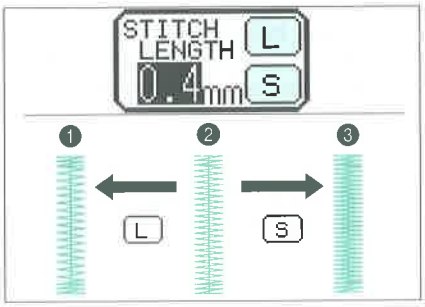

Press the **STITCH ADJUST** key, and then use the **STITCH LENGTH** keys [L] and [S] to adjust the stitch length of the bar tack.

1. Pressing **STITCH LENGTH** key [L] lengthens the bar tack stitch length.
2. Standard bar tack stitch length
3. Pressing **STITCH LENGTH** key [S] shortens the bar tack stitch length.

Note

If the fabric does not feed (for example, because it is too thick), press the **STITCH LENGTH** key [L] to increase the stitch length.

Adjusting the darning width

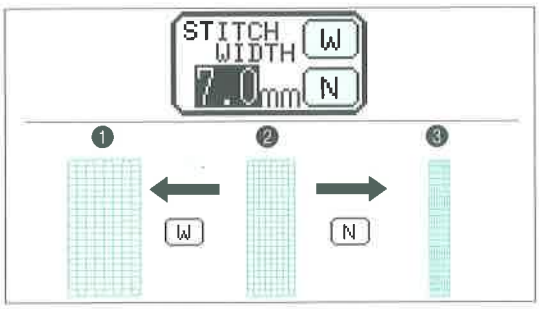

Press the **STITCH ADJUST** key, and then use the **STITCH WIDTH** keys [W] and [N] to adjust the width of the darning.

1. Pressing **STITCH WIDTH** key [W] increases the width of the darning.
2. Standard darning width
3. Pressing **STITCH WIDTH** key [N] decreases the width of the darning.

Adjusting the stitch length of the darning

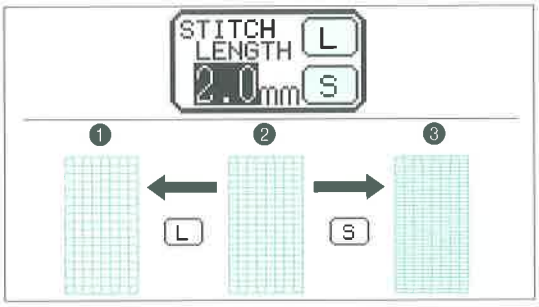

Press the **STITCH ADJUST** key, and then use the **STITCH LENGTH** keys [L] and [S] to adjust the stitch length of the darning.

1. Pressing **STITCH LENGTH** key [L] lengthens the darning stitch length (makes it less dense).
2. Standard darning stitch length
3. Pressing **STITCH LENGTH** key [S] shortens the darning stitch length (makes it more dense).

Note

If the fabric does not feed (for example, because it is too thick), press the **STITCH LENGTH** key [L] to increase the stitch length.

Darning stitch cycle

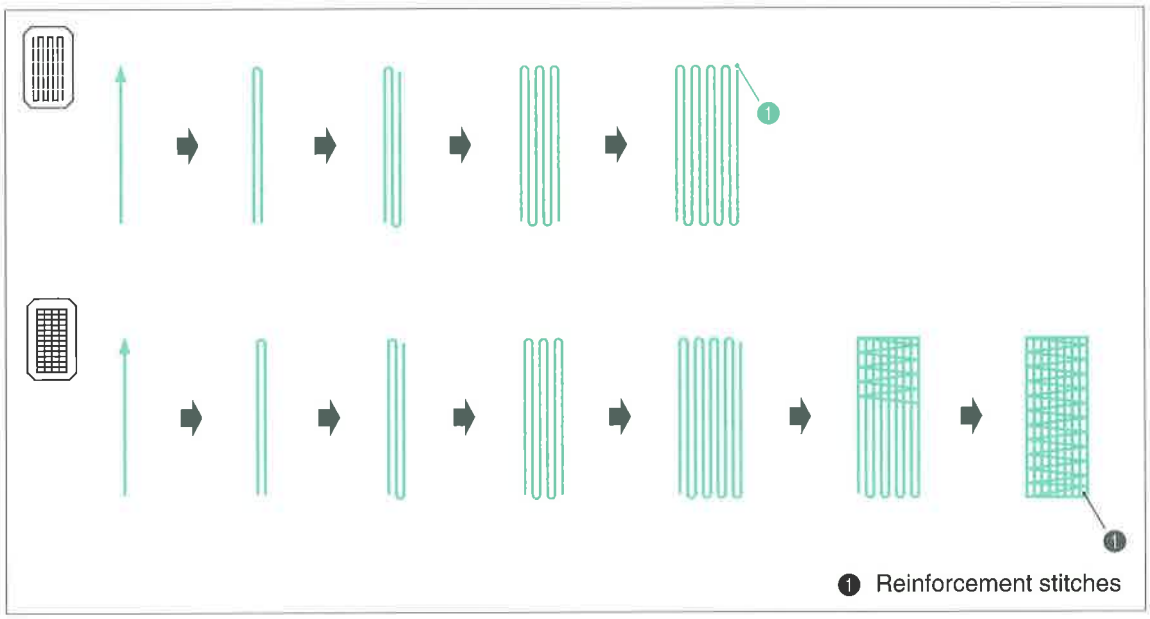

EYELET STITCHING

❶ **Eyelet**

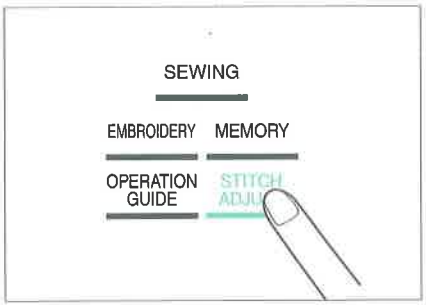

1. Press the **STITCH ADJUST** key, and then select the eyelet size.

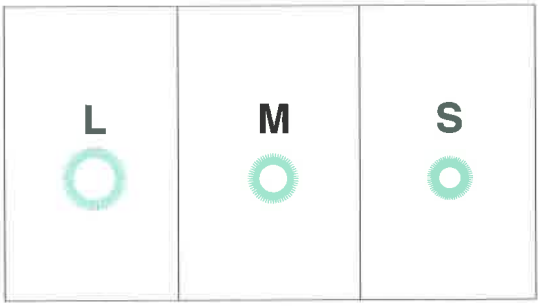

(Shown in actual size.)

L (large): 9/32" (7.0 mm)
M (medium): 15/64" (6.0 mm)
S (small): 13/64" (5.0 mm)

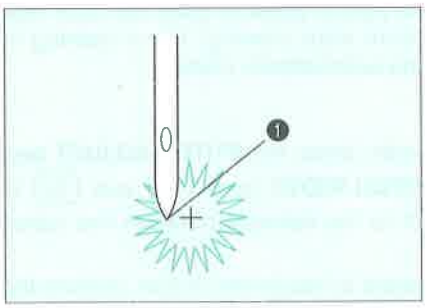

2. Attach presser foot **N**.
3. Check that the needle drops at the desired position, lower the presser foot lever, and then start sewing. Once sewing is completed, the machine automatically sews reinforcement stitches, and then stops.
   ❶ Needle drop point

Note
If automatic thread cutting is turned on before you start sewing, both threads are automatically cut after the reinforcement stitches are sewn.

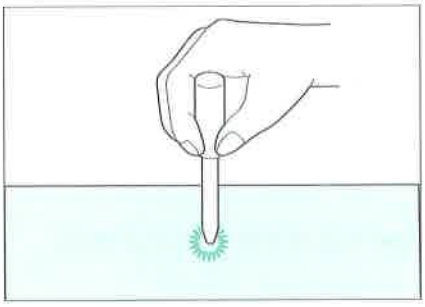

4. Make a hole in the center with an eyelet punch.

Attaching four-hole buttons

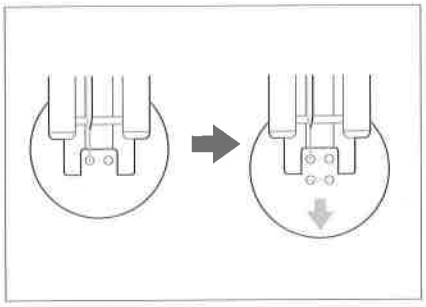

First, sew the two holes which are closest to you. Once they have been sewn, raise the presser foot lever, move the fabric so that the needle goes into the next two holes, and then sew them in the same way.

Attaching a shank to the button

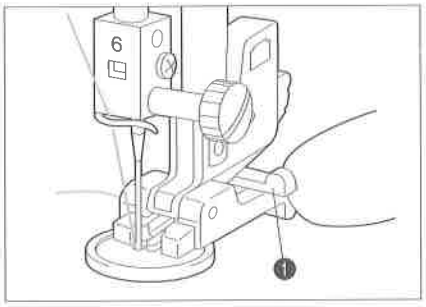

1. Pull the shank lever toward you before sewing.
   ❶ Shank lever
2. After sewing is completed, remove the fabric from the sewing machine.

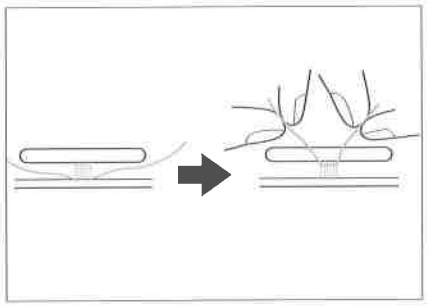

3. Pull the two ends of the upper thread between the button and the fabric, wind them around the shank, and then tie them firmly together.
4. Tie the ends of the bobbin thread together from the wrong side of the fabric.

APPLIQUÉ QUILT STITCHING

❶

❶ Applique

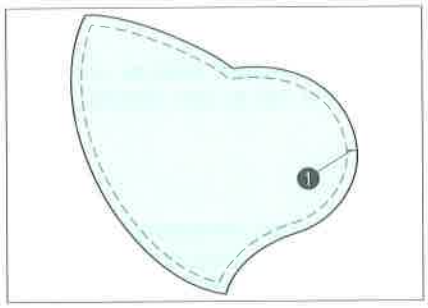

1. Trace the pattern onto the appliqué fabric, and then cut around it leaving an extra margin of between 3/256" and 5/256" (0.3 and 0.5 mm).
   ❶ Seam margin (3/256" to 5/256" (0.3 to 0.5 mm))

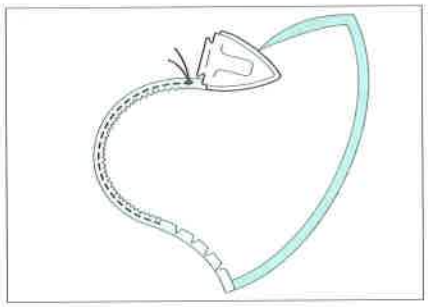

2. Cut a piece of thick paper to the exact size of the pattern, center it in the fabric, and then fold over the seam margin using an iron.
3. Take away the thick paper.

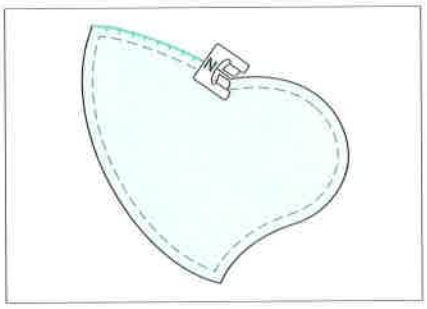

4. Turn the fabric over and attach it in place by sewing basting stitches around the edge.
5. Attach monogramming foot **N**, press , and then sew around the edge, while making sure that the needle drops outside of the pattern as close to the edge as possible.

Note
If automatic thread cutting and automatic reverse/reinforcement stitching are turned on before you start sewing, pressing just the start/stop button automatically sews reinforcement stitches before sewing. In addition, pressing the reverse/reinforcement stitch button at the end of the stitching automatically sews reinforcement stitches, trims the threads and stops the machine.

Sample patterns for appliqué quilts

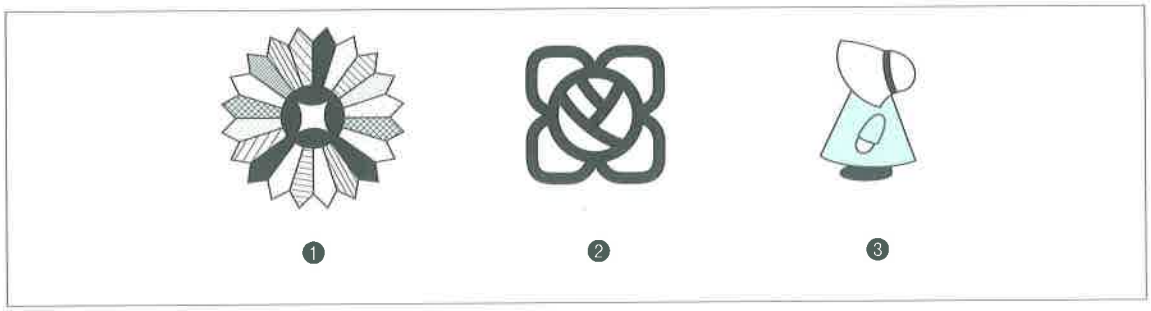

❶ Dresden plate
❷ Stained glass
❸ Sunbonnet Sue

SMOCKING STITCHING

Use this stitch to create decorative smocking on clothing.

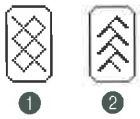

❶ **Smocking stitch**
❷ **Fagoting**

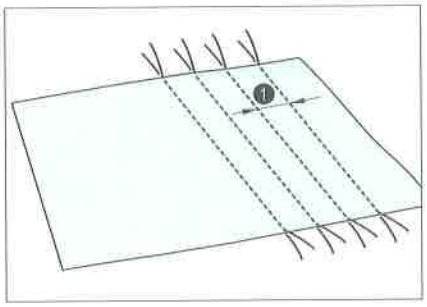

1. Press [**Straight (Left)**], set the stitch length to 5/32"(4.0 mm), and select a weak thread tension.
2. Sew straight stitches at intervals of 25/64" (1.0 cm).
   ❶ About 25/64" (1.0 cm)

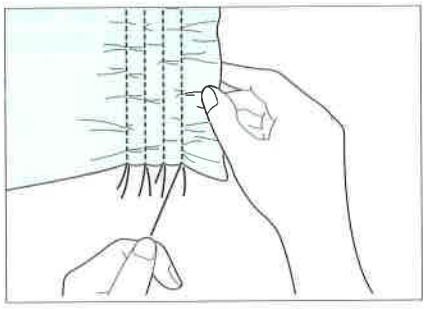

3. Pull the bobbin threads to obtain the desired amount of gather, and then smooth the gathers by ironing them.

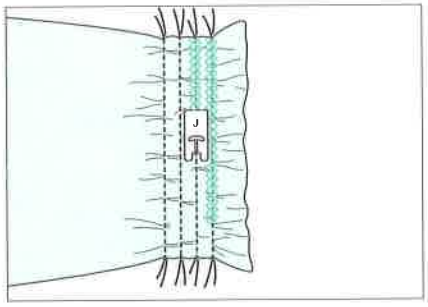

4. Attach presser foot **J**, press or , and sew over the straight stitches.

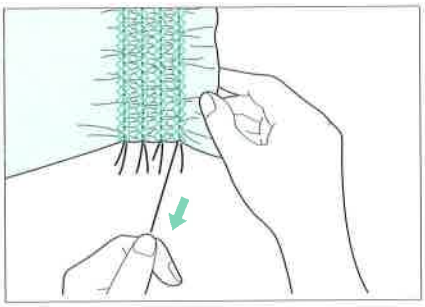

5. Pull out the straight stitch threads to remove them.

FAGOTING

Use these stitches to sew decorative stitches across an open seam.

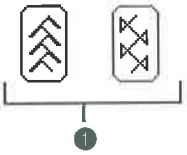

❶ **Fagoting**

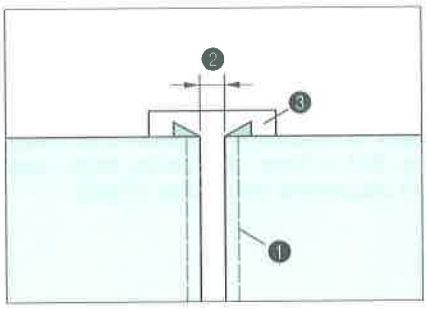

1. Baste the two pieces of fabric onto thin paper or a water-soluble stabilizer sheet.
   ❶ Basting stitch
   ❷ 5/32" (0.4 cm)
   ❸ Thin paper or stabilizer sheet

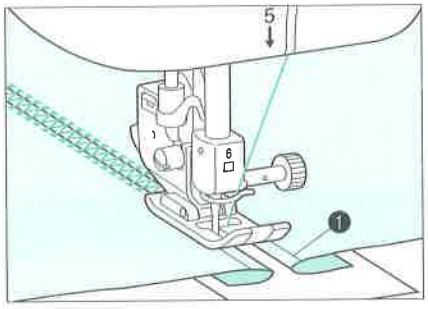

2. Attach presser foot **J**, center it on the paper between the folded fabric edges and sew the fagoting.
   ❶ Basting stitches

Note

- Use thicker threads (#30).
- After sewing, remove the paper.

HEIRLOOM STITCHING

Use these stitches for sewing tablecloths, and for making decorative hems on clothing and decorative stitching on shirt fronts.
A more attractive finish can be obtained if a wing needle (130/705H) is used. When a wing needle is used and the stitch width has been set manually, before starting to sew, carefully turn the balance wheel toward you and check that the needle does not touch the presser foot.

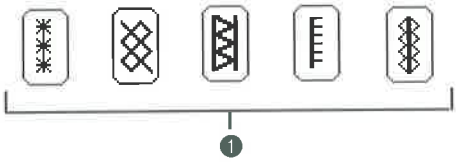

❶ **Heirloom**

Hemstitching with

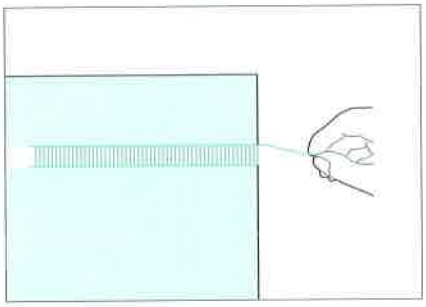

1. Pull out several threads and remove them from one section of a piece of fabric so that the fabric is frayed. Removing about 5 or 6 threads will leave a 1/8" (3.0 mm) frayed area.

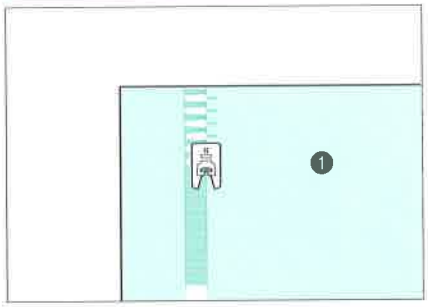

2. Attach presser foot **N**.
3. With the wrong side of the fabric facing up, sew along one edge of the frayed section.
   ❶ Wrong side of fabric

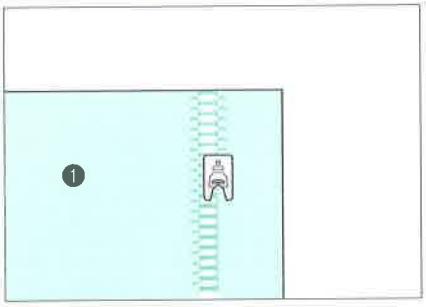

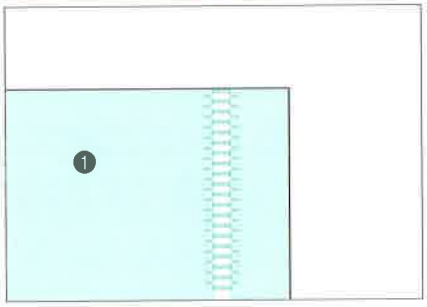

4. Turn the fabric around, keeping the reverse side of the fabric facing up, and sew along the other edge of the frayed section so that the stitches are parallel and appear as shown below.
   ❶ Wrong side of fabric

SETUP

Installing embroidery foot Q

CAUTION
Be sure to turn off the power before attaching embroidery foot Q. If the power is left on and the start/stop button is accidentally pressed, the machine will start operating, which could result in serious injury.

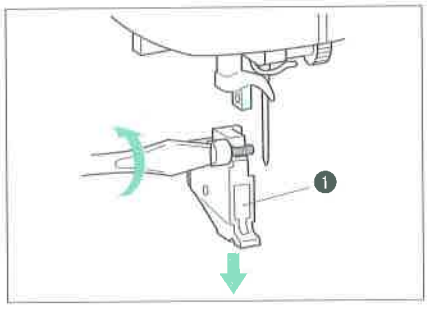

1. Press the needle position button to raise the needle, and then turn off the sewing machine.

2. Raise the presser foot lever.

3. With the enclosed screwdriver or disc-shaped screwdriver, loosen the screw on the presser foot holder, and then pull the holder downward to remove it.
   ❶ Presser foot holder

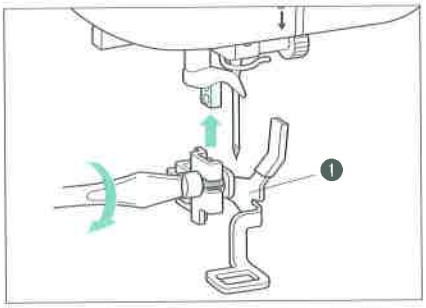

4. Slide the bracket on embroidery foot **Q** up onto the presser foot bar, and then fasten it by firmly tightening the screw with the enclosed screwdriver or disc-shaped screwdriver.
   ❶ Embroidery foot **Q**

CAUTION
Be careful not to touch the tip of the needle, otherwise injuries may occur.

Note
- Make sure that embroidery foot **Q** is tightly attached to the presser foot bar.
- It is recommended that a 90/14-size needle be used when embroidering thicker fabrics such as denim or when using stabilizing products such as puffy foam. A 75/11-size needle might bend or break, which could result in injuries.

Embroidery screen

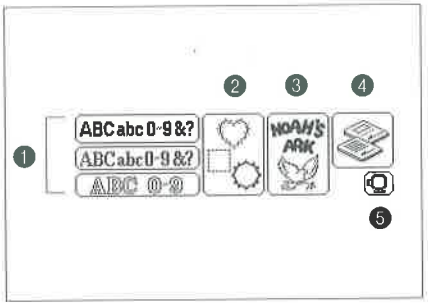

Press a key on the screen with your finger to select the pattern or to start the indicated function or operation.

❶ Press the key showing the character font that you would like to use.
❷ Press this key to embroider a frame.
❸ Press this key to embroider a one-point pattern.
❹ Press this key to select a pattern from the installed embroidery card.
❺ Press this key to position the embroidery arm so that the embroidery unit can be removed.

Removing the embroidery unit

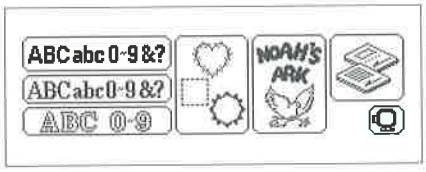

1. Make sure that the embroidery frame has been removed, press the **EMBROIDERY** key, and then press . The carriage will move to the position where it can be removed.

CAUTION
If the above step is not performed, the embroidery unit cannot be placed in its box and packing materials for storage.

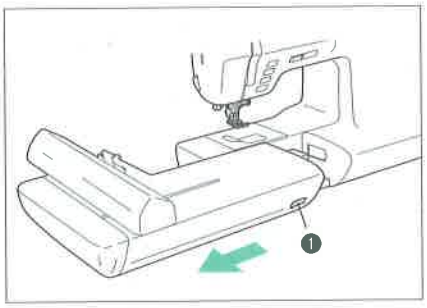

2. Turn off the sewing machine, hold the left side of the embroidery unit, and while pressing the release button, gently slide the embroidery unit away from the machine.
   ❶ Release button

CAUTION
Make sure that the power is turned off, otherwise damage may result.

Inserting the fabric in the embroidery frame

Embroidery frames are available in four sizes: extra-large, large, medium, and small.
Embroidery area of extra-large frame: 11-53/64" (30 cm) (H) × 5-3/64" (13 cm) (W)
Embroidery area of large frame: 7" (18 cm) (H) × 5-3/64" (13 cm) (W)
Embroidery area of medium frame: 4" (10 cm) (H) × 4" (10 cm) (W)
Embroidery area of small frame: 25/324" (2 cm) (H) × 2-23/64" (6 cm) (W) (for embroidering initials)

CAUTION

- **Depending on the size of the pattern and the position of the pattern to be embroidered, it may not be possible to use the medium and small frames. When using these frames, be sure to check the pattern layout on the screen (refer to page 98) before starting to embroider. If the wrong frame is used by mistake, the presser foot may hit the frame, possibly causing injuries.**
- **Do not use any embroidery frames other than those shown here, otherwise injuries could occur.**

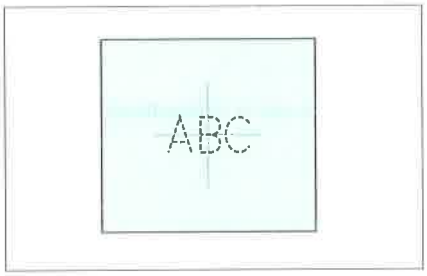

1. Use a chalk pen to mark the center of the embroidery pattern position on the fabric.

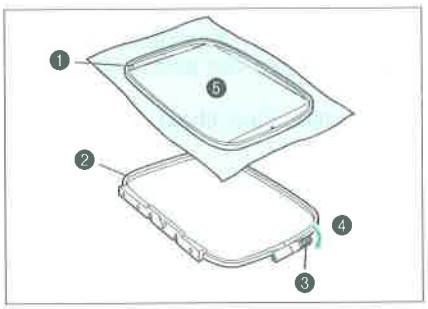

2. Loosen the screw on the outer frame and separate the inner and outer frames. Place the fabric on top of the outer frame with the right side of the fabric facing up, and then place the inner frame inside the outer frame to clamp the fabric.
   1. Inner frame
   2. Outer frame
   3. Screw
   4. Loosen
   5. Right side of fabric

Note
Be sure to align the arrow marks on the two frames (▲ on the inner frame with ▼ on the outer frame).

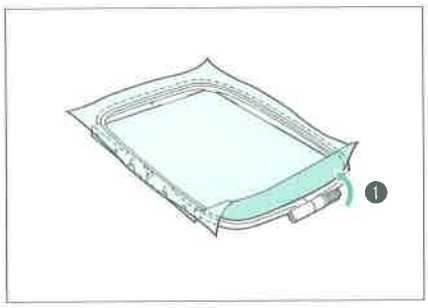

3. Tighten the screw just enough to secure the fabric, and then gently remove the fabric from the frame without loosening the screw.
   1. Tighten

Note
This stretches the fabric to help reduce pattern distortions while embroidering.

4. Remove the inner frame.

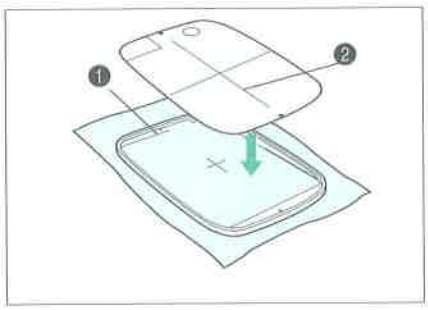

5. Place the inner frame on top of the fabric, place the embroidery sheet inside the inner frame, and then align the center of the lines on the sheet with the mark on the fabric.
   1. Inner frame
   2. Line

Note
For best results, lay the outer frame on a flat surface and lay the fabric on top of it before aligning the center of the embroidery sheet with the mark on the fabric.

Attaching the embroidery frame to the embroidery arm

CAUTION
Be sure to wait until the embroidery unit has finished initializing before trying to attach the embroidery frame. (Refer to page 78.)

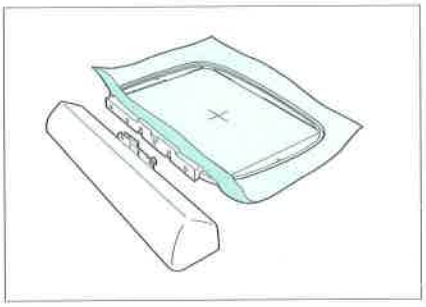

1. Raise the presser foot lever to its highest position, and then pass the embroidery frame under the presser foot, making sure that the mounting bracket of the frame is on the left side and the right side of the fabric is facing up.

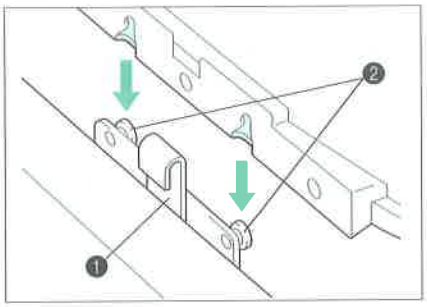

2. Align the slots in the mounting bracket of the frame with the two knobs on the frame holder of the embroidery arm, and then press the frame onto the frame holder so that it clicks into place.
   ❶ Frame holder on embroidery arm
   ❷ Knobs

Note
Be sure that the mounting bracket on the embroidery frame is attached to both knobs. If it is attached to only one knob, the pattern may not be embroidered correctly.

Removing the embroidery frame from the embroidery arm

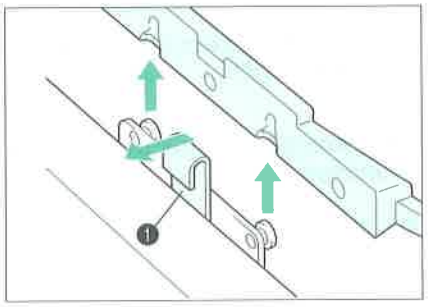

While pushing the release lever on the frame holder to the left, lift the embroidery frame up to remove it.
❶ Release lever

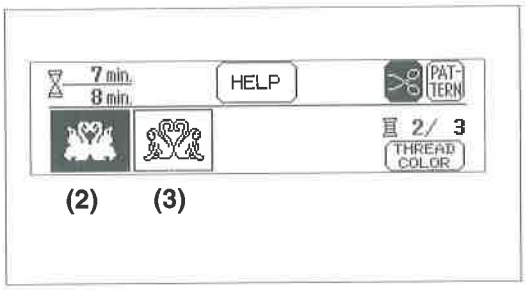

2. Replace the upper thread with the next color and press the start/stop button. The second part of the pattern (2) is embroidered, and then the machine automatically sews the reinforcement stitches and stops.

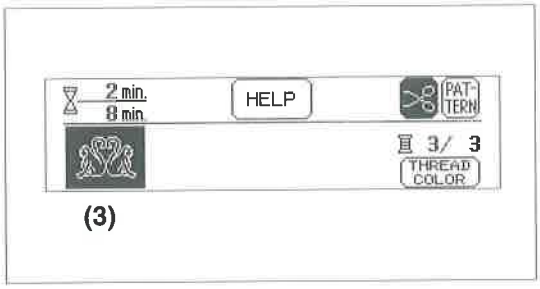

3. Replace the upper thread with the next color and press the start/stop button. The third part of the pattern (3) is embroidered, and then the machine automatically sews the reinforcement stitches and stops.

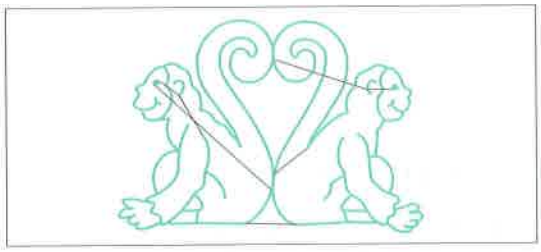

4. Trim off any excess thread.

Example: To select characters to create the word "BUS"

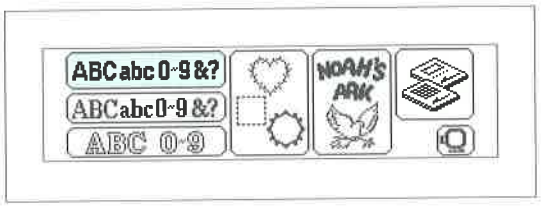

1. Press ABCabc0~9&?.

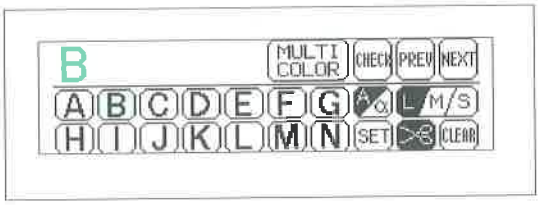

2. Press the **B** key.

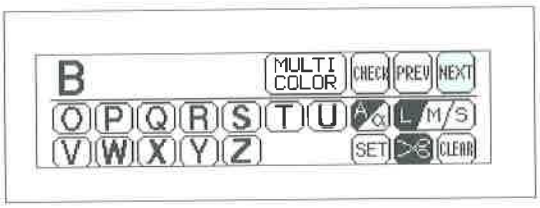

3. Press the **NEXT** key.

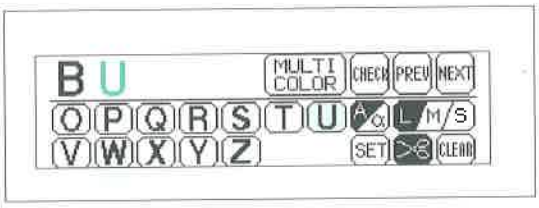

4. Press the **U** key.

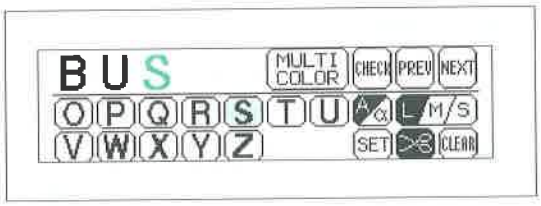

5. Press the **S** key.

Changing thread density of the stitch on characters and some frame patterns

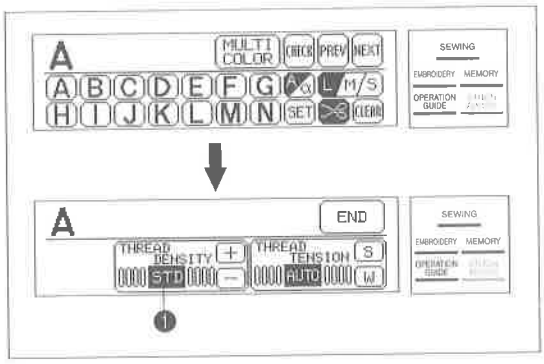

The thread density adjustment is not available for all patterns. Patterns other than the characters and some frame patterns are not adjustable.

1. Touch **STITCH ADJUST** key.
2. Touch **THREAD DENSITY** key.
3. The thread density of the stitches will become farther apart (coarser) each time "[−]" key is touched. The thread density of the stitches will become closer together (finer) each time "[+]" key is touched.

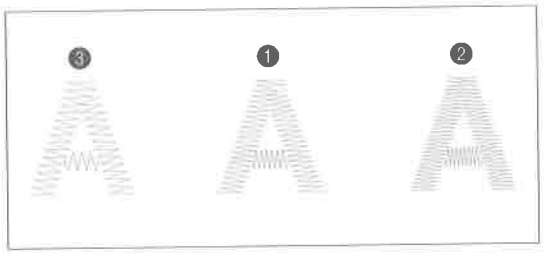

❶ STD (standard)
❷ + (stitches closer together)
❸ – (stitches farther apart)

* The normal setting is "STD" (standard).

Checking the text

After a lot of text has been typed in, it may not be possible to view some of it on the screen. Press the **CHECK** key for the entire text to scroll across the screen.

Example: When "abcdefghijk" have been typed in small-sized lowercase characters

After "k" is typed in, the display appears as shown in the illustration at the left.

Note
When the size of the text starts to exceed the size of the embroidery area of the frame, no more characters can be typed in. To type in more text, select a smaller character size. (Refer to page 88.)

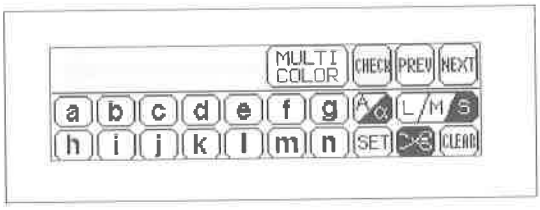

Press the **CHECK** key to scroll all of the text across the screen.

Note
If all the text can already be displayed on the screen at one time, the text does not scroll.

Creating frame patterns

Frame patterns are created by combining the desired frame shape with the selected stitch.

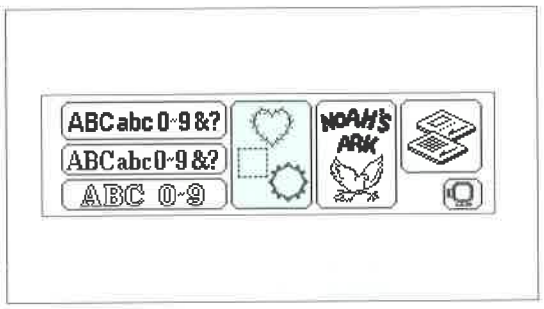

1. Press .

Note
If the screen shown at the left is not displayed, press the **EMBROIDERY** key.

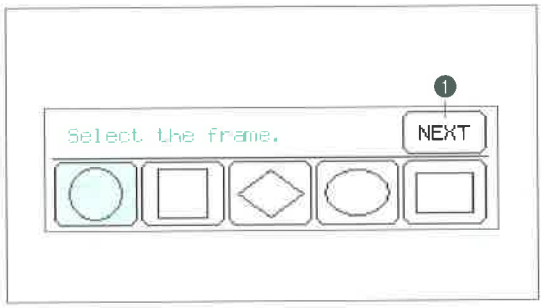

2. Press the key for the desired frame shape.
   ❶ Press this key to display more frame shapes. (A total of 10 different frame shapes are available.)

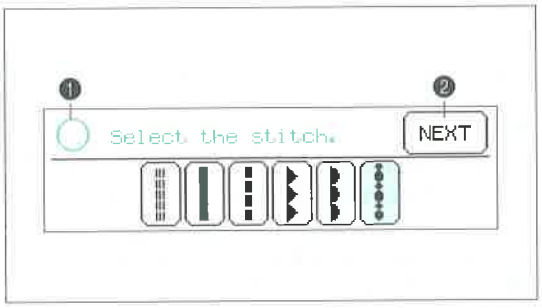

3. Select the desired stitch.
   ❶ This shows the currently selected frame shape.
   ❷ Press this key to display more stitches. (A total of 12 different stitches are available.)

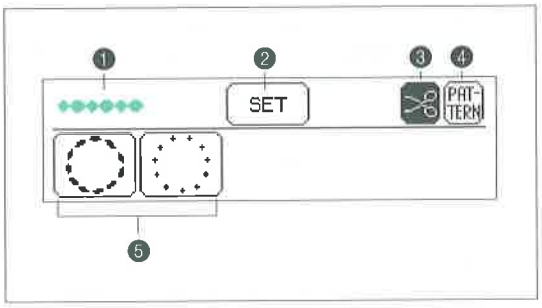

The selected frame pattern is shown on the screen.
❶ This shows the currently selected stitch.
❷ Press this key if you would like to change the embroidery pattern position within the frame (page 96), change the overall size of the pattern (page 99), or use the Help function, which allows you to search for a specific point in the embroidering of the pattern (page 102).
Note
This key changes to the **HELP** key after embroidering starts.

❸ Press this key to turn on and off automatic thread cutting. (Refer to page 37.)
❹ Press this key to return to the screen where the pattern was selected (step 2 above).
❺ If the frame pattern can be embroidered using different colors of thread, the embroidering order of each part of the pattern is shown from left to right.

Displaying the thread color names

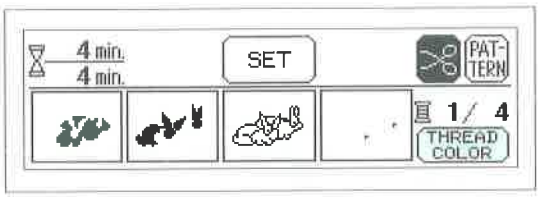

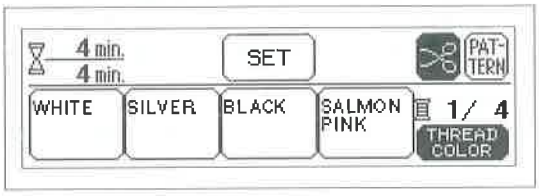

After selecting a pattern, press the **THREAD COLOR** key so that it appears as THREAD COLOR to display the thread color names instead of each part of the pattern.

Note

- Pressing THREAD COLOR so that it changes back to THREAD COLOR re-displays the embroidering order of each part of the pattern.
- If the **THREAD COLOR** key is not displayed, it is not possible to display the color names.

Selecting patterns from a memory card

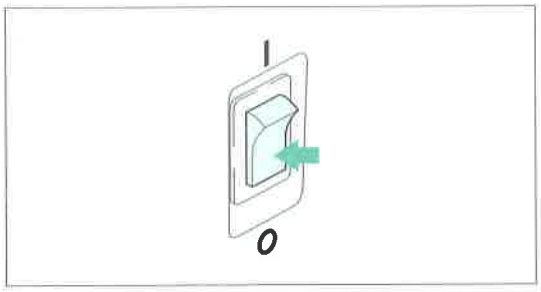

1. Set the main power switch to "**O**" to turn off the sewing machine.

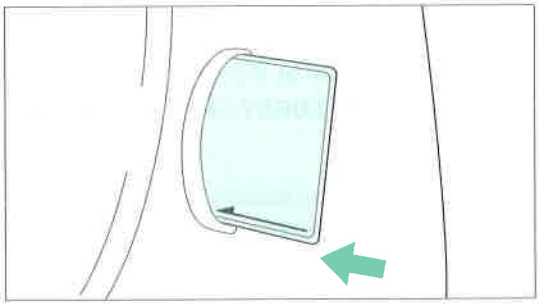

2. Hold the memory card so that the arrow on the card faces toward you, and then insert the card as far as possible into the slot on the right side of the sewing machine.

CHANGING THE PATTERN SETTINGS

SET

Editing the layout of the pattern

SET → LAYOUT

The position for embroidering the pattern can be changed by using the layout screen. This is useful if you want to embroider a pattern somewhere other than the center of the embroidery area of the frame, such as in the corner of the fabric.

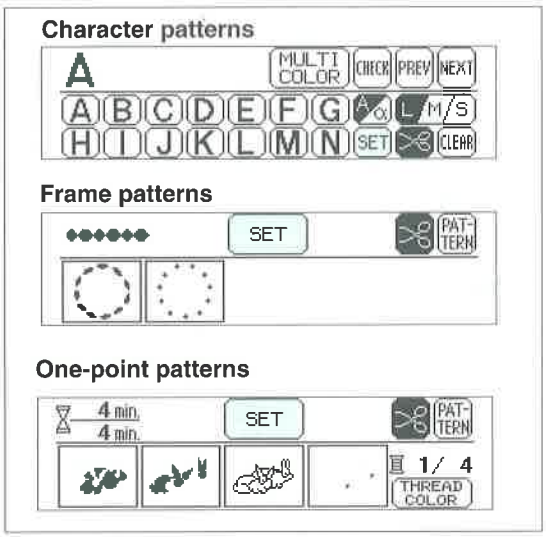

1. Press the **SET** key.

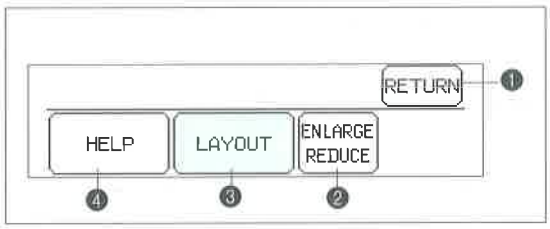

2. Press the **LAYOUT** key.
   - ❶ Press this key to return to the screen that was previously displayed.
   - ❷ Press this key to display a screen that allows you to change the size of the pattern. (Refer to page 99.)
   - ❸ Press this key to display a screen that allows you to change the position and sewing direction of the pattern.
   - ❹ Press this key to display a screen that allows you to search for a specific point in the embroidering of the pattern if the thread breaks while sewing. (Refer to page 102.)

Changing the pattern direction

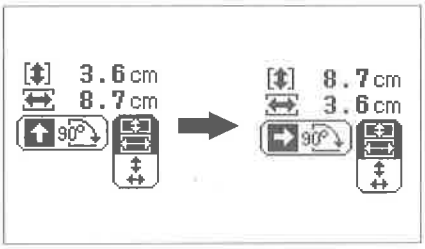

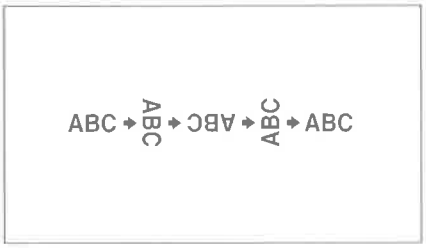

Each time is pressed the pattern is rotated in 90° steps clockwise as shown in the illustration at the left. The arrow within shows the direction for the top of the pattern.

Note
Some patterns may be too long to be rotated 90°. In such cases, these patterns can only be rotated by 180°.

Mirror imaging patterns

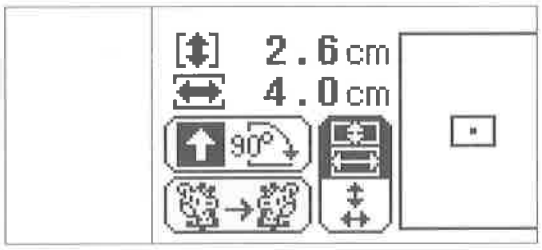

Press so that it appears as to flip the pattern horizontally.

Note

- Pressing so that it changes back to flips the pattern back to a normal image.
- is not displayed for some patterns.

Changing the size of patterns

The sizes of patterns can be changed as desired.

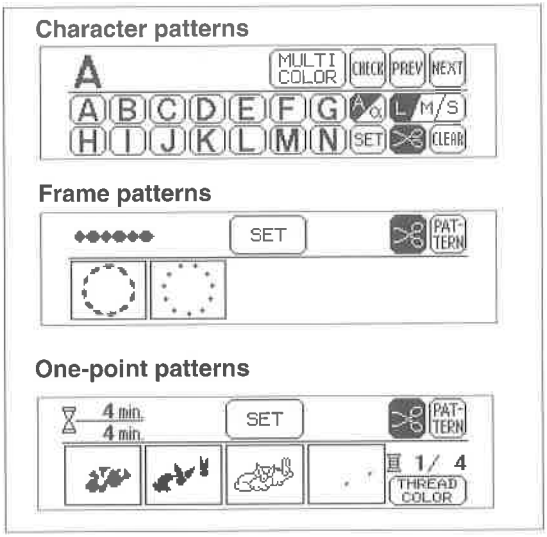

1. Press the **SET** key.

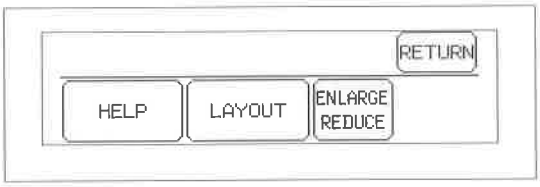

2. Press ENLARGE REDUCE.

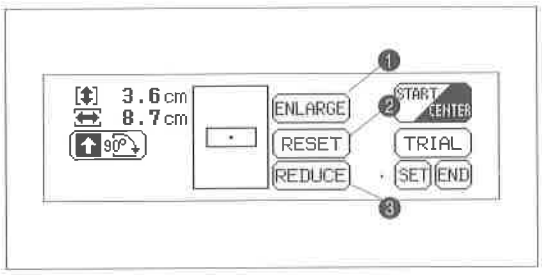

3. Change the size of the pattern.
   ❶ Press this key to make the pattern larger.
   ❷ Press this key to return the pattern to its original size.
   ❸ Press this key to make the pattern smaller.

Note
- The maximum sizes for frame patterns vary according to the pattern.
- Some frame patterns can be enlarged even further if they are rotated 90°.
- Refer to page 96 for details on the other keys in this screen.

4. After making the desired adjustments, press the **END** key.

Retrieving a pattern which has been saved

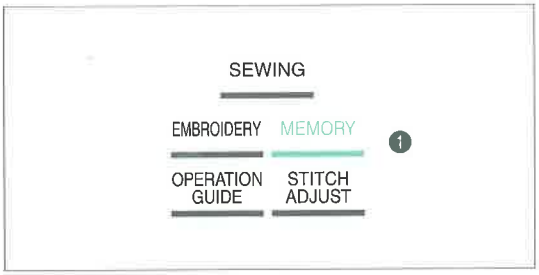

Example: To recall the pattern "Boy" that has already been saved in memory address 2

1. Press the **MEMORY** button.
   ❶ **MEMORY** button

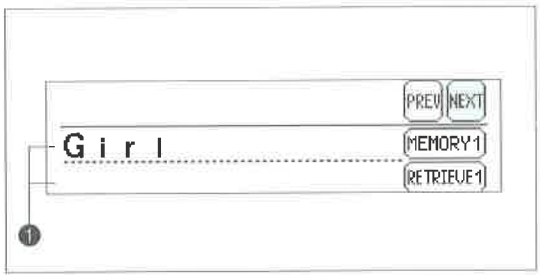

2. Press the **NEXT** key.
   ❶ If the desired pattern is not displayed on the screen, press the **NEXT** and **PREV** keys until the desired pattern is shown.

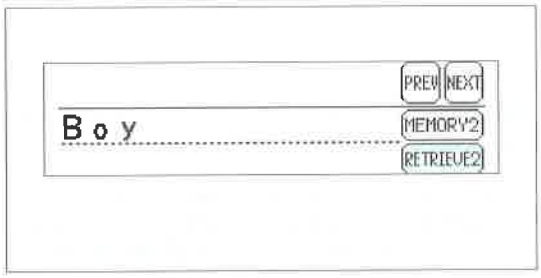

3. Press the **RETRIEVE 2** key.

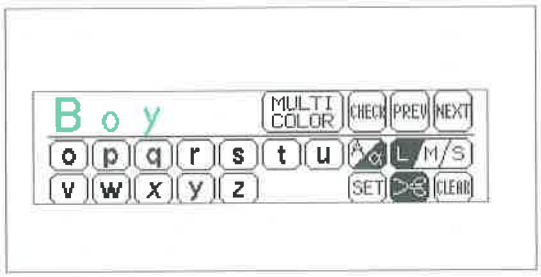

The retrieved pattern appears on the screen and can be edited and embroidered.

Note
Patterns which are saved from an embroidery card can only be retrieved if the card containing that pattern has been inserted into the card slot of the sewing machine.

Embroidering again from the beginning

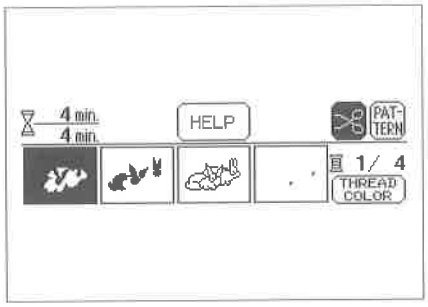

1. Press the **HELP** key.

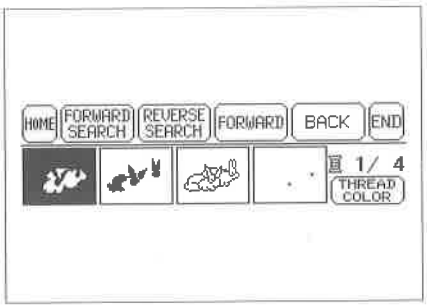

2. Press the **HOME** key. The embroidery frame moves so that the needle returns to the embroidering starting point.

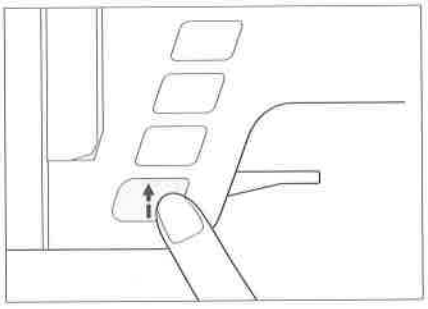

3. Lower the presser foot lever and start embroidering.

Using the extra-large embroidery frame (optional)

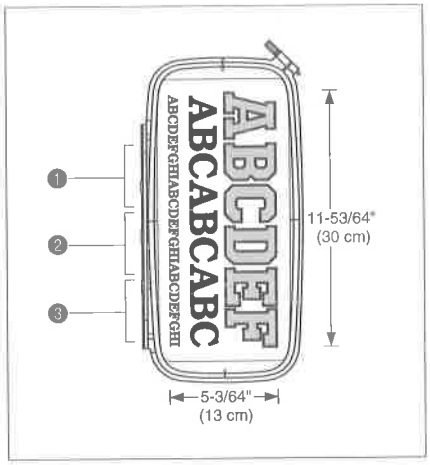

By attaching this extra-large embroidery frame at each of its three installation positions, extra-large designs can be embroidered, for example when sewing logos onto sweatshirts.

❶ Top installation position
❷ Middle installation position
❸ Bottom installation position

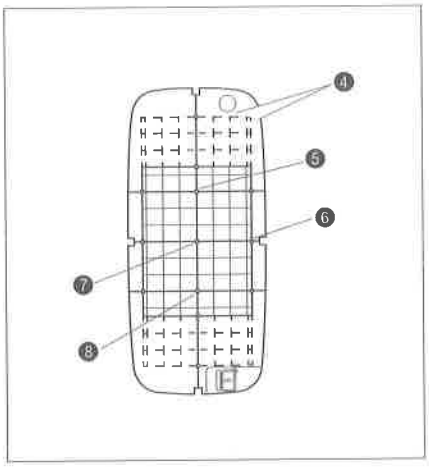

EMBROIDERY SHEET

❹ Embroidering range
❺ Center of the pattern (when installed at position ❶)
❻ Reference line
❼ Center of the pattern (when installed at position ❷)
❽ Center of the pattern (when installed at position ❸)

Note
When using the extra-large embroidery frame, be sure that there are no objects within 30 cm from the sewing machine, otherwise a misaligned embroidered pattern or injuries may occur.

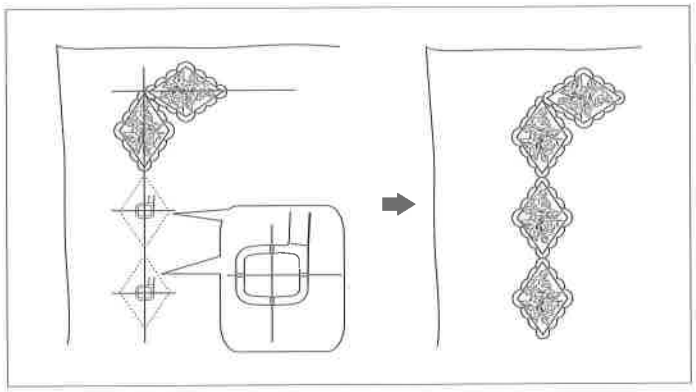

7. Before embroidering the bottom two patterns shown in the illustration, press the **LAYOUT** key, and position the pattern correctly. To position the frame so that the pattern will be embroidered correctly, press START CENTER so that it appears as START CENTER (refer to page 98), and then use the arrow keys to align the needle with the center of each pattern's reference lines (refer to page 96).

Note

When combining patterns from embroidery cards no. 14 and 31:

With the extra-large embroidery frame attached at any of the three installation positions (top, middle, or bottom), patterns A, B, and C can be combined and embroidered.

Pattern A: Before embroidering, press the **LAYOUT** key, press so that it appears as , and then press ↑ to move the pattern to +3.60.

Pattern B: Embroider the pattern without changing its position.

Pattern C: Before embroidering, press the **LAYOUT** key, press so that it appears as , and then press ↓ to move the pattern to -3.60.

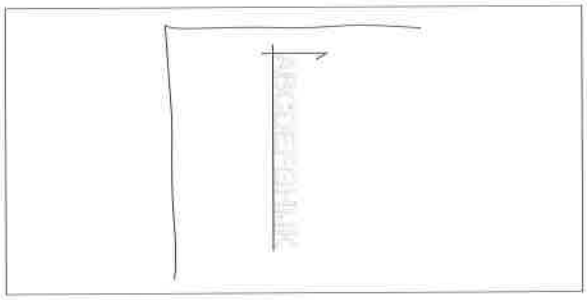

Connecting letters

Example: To embroider "ABCDEFGHIJK"

1. Mark the location on the fabric where you wish to embroider the design.

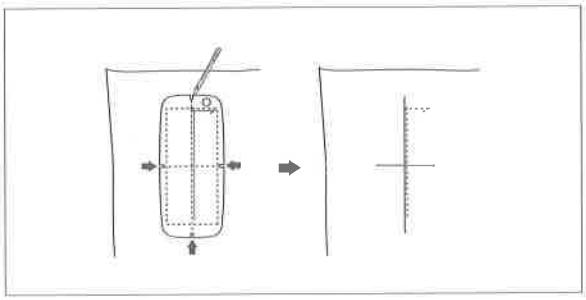

2 Position the embroidery sheet over the entire design drawn on the fabric so that the reference lines of the embroidery sheet align with the center of the design, and then draw reference lines for the entire design.

Combining a frame pattern with a design

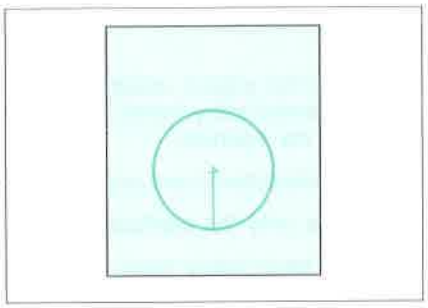

1. Create a frame pattern, and then embroider it.
   A cross (+) is sewn in the center of the frame after it is embroidered. This mark can be used as a guide for positioning characters or other patterns within the frame.

2. Create the inner design, and then press the **SET** key, then the **LAYOUT** key to display the layout screen.

3. Select the center needle position (Make sure the button appears as START CENTER.), and then adjust the embroidery pattern position so that the hole in embroidery foot **Q** aligns with "+". Then, embroider the design.

Making badges or decorative patches

1. After embroidering a frame and the inner design, select the same frame pattern, press , as the stitch, and then sew the same frame pattern around the outside of the original frame so that it is slightly larger than the original.

2. Cut cleanly around the outside frame, following the line of the outside stitching.

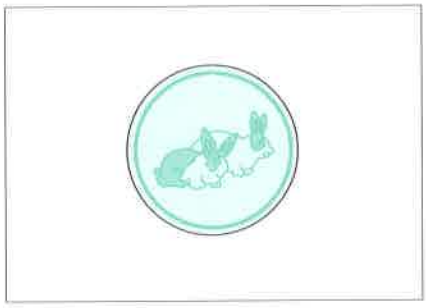

Embroidering onto small pieces of fabric or in corners

Use stabilizer material to provide extra support while embroidering. After embroidering is completed, carefully remove the stabilizer material. Use stabilizer material which is specially designed for embroidering.

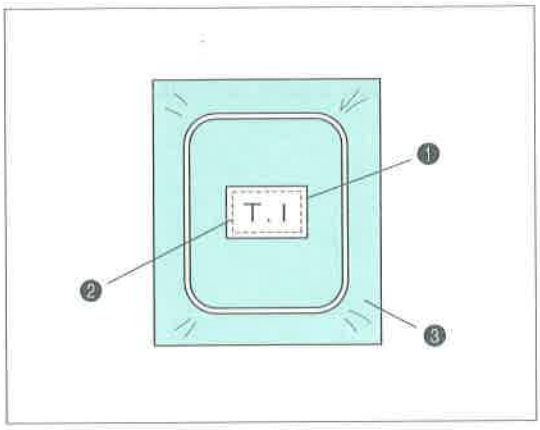

Case A

1. Fabric
2. Iron on the stabilizer material. (If you do not wish to use an iron, attach the stabilizer material with a basting stitch.)
3. Stabilizer

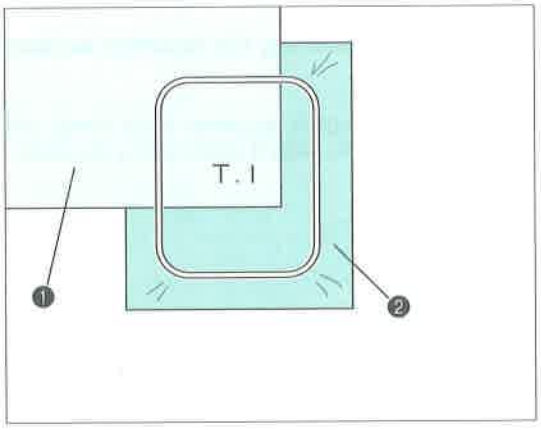

Case B

1. Fabric
2. Stabilizer

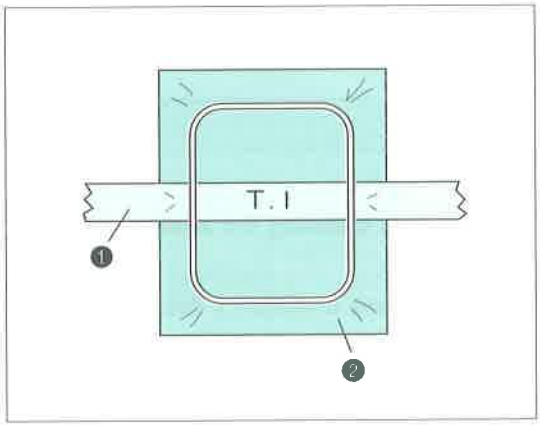

Case C

1. Ribbon (Secure with double-sided tape.)
2. Stabilizer

Note

Temporary spray-on adhesive can also be used to secure unusually shaped objects. If adhesive is used, some glue may get on the presser foot, needle and needle plate. After finishing embroidering the appliqué pattern, clean away the glue.

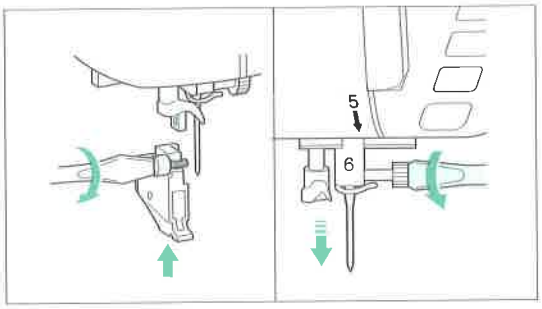

1. Set the main power switch to " **O** ", and then remove the presser foot holder and the needle.

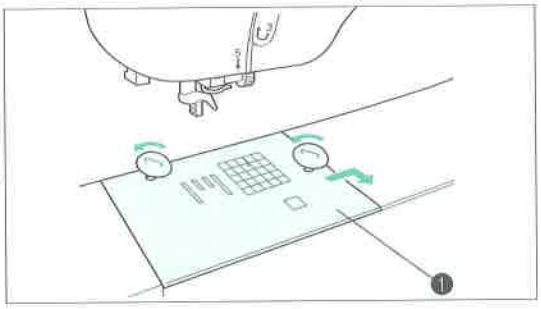

2. Loosen the screws with the enclosed screwdriver or disc-shaped screwdriver.

3. Remove the needle plate.
   1 Needle plate

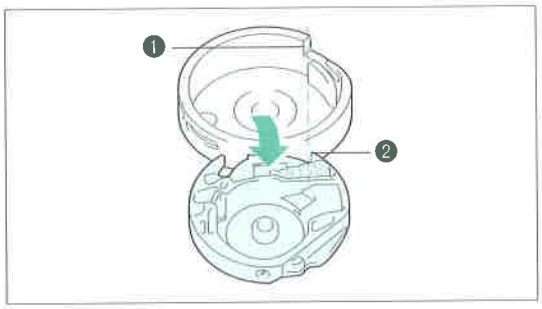

4. Turn the balance wheel towards you until the edge of the notch in the shuttle aligns with the edge of the race shelf, and then remove the race.
   1 Edge of notch in shuttle
   2 Edge of race shelf

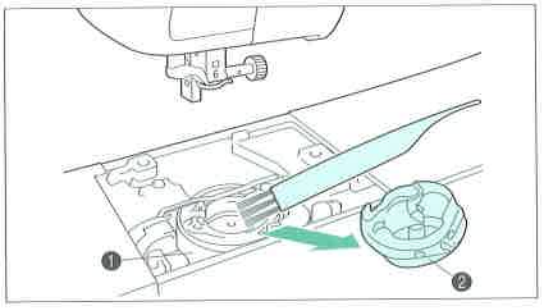

5. Take out the shuttle.

6. Remove accumulated lint and thread from the inside of the shuttle and race with a brush or a vacuum cleaner.
   1 Race
   2 Shuttle

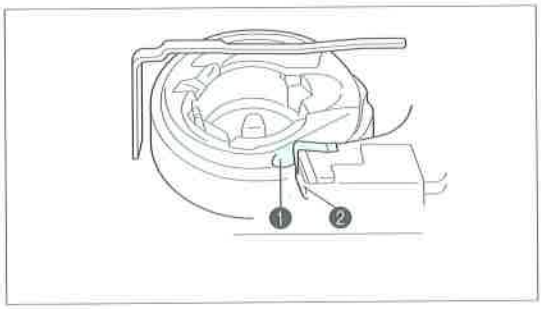

7. Insert the shuttle by aligning the projection on the shuttle with the spring on the stopper.
   1 Projection
   2 Spring

Note
Lint and dust accumulated in the race will sometimes cause poor stitching or a malfunction of the bobbin thread sensor.

ERROR MESSAGES

If the machine is not properly set when the start/stop button is pressed, or if a correction of your operating procedure is required, the machine will not start and will instruct you with an alarm and a warning message on the LCD.

Warning messages

Check if thread is entangled.
Check if needle is bent.
CHECK

This message appears when the motor becomes locked, such as when the thread is entangled.

Start/Stop button does not work when foot control is connected.
Disconnect foot control.
CHECK

This message appears when the start/stop button is pushed while the foot controller is connected.

Select pattern.
CHECK

This message appears when the start/stop button, or reverse/reinforcement stitch button is pressed, but no pattern has been selected.

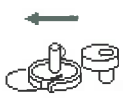

Return bobbin winding shaft to left.
CHECK

This message appears when the reverse/reinforcement stitch button, needle position button or thread cutter button is pushed while the bobbin winder shaft is moved to the right.

Raise presser foot lever.

This message appears when the embroidery unit is being initialized, but the presser foot is lowered.

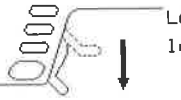

Lower presser foot lever.
CHECK

This message appears when the start/stop button, reverse/reinforcement stitch button, thread cutter button or the foot controller is pressed while the presser foot lever is raised.

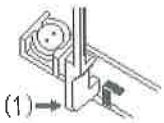

Raise buttonhole lever(1).
CHECK

This message appears when the start/stop button or reverse/reinforcement stitch button is pressed while a pattern other than a buttonhole is selected and the buttonhole lever is lowered.

Select pattern.

CHECK

This message appears when the STITCH ADJUST key is pressed before selecting a pattern.

Foot controller will not work while embroidery unit is attached.
Remove foot controller

CHECK

This message appears when the foot controller is used while the embroidery unit is installed.

Pattern is too big for large frame. To add more patterns, rotate this pattern.

90°

CHECK

This message appears when the entered characters are too long to fit within the embroidery frame. More characters may be added if the pattern is rotated 90 degrees.

Complete pattern entry.

CHECK

This message appears when the start/stop button is pressed before the frame pattern has been completely created.

This pattern can not be saved in memory.

CHECK

This message appears when the pattern that you tried to store could not be stored.

No pattern is memorized.

CHECK

This message appears when trying to retrieve a pattern, but no patterns have been stored.

Saved on a card.

This message appears when trying to retrieve a pattern from a memory card that is not inserted.

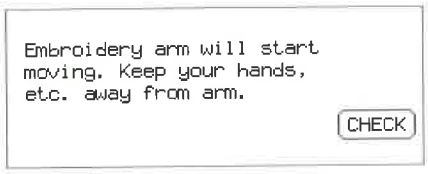

This message appears when the sewing machine is turned on while the embroidery unit is installed.

This message appears while storing a pattern in the memory.

Troubleshooting

This sewing machine is equipped with an easy-to-use troubleshooting feature, which provides assistance when there is a problem sewing. Press the corresponding key for the problem to see possible causes of the problem.

1. Press the **OPERATION GUIDE** button.

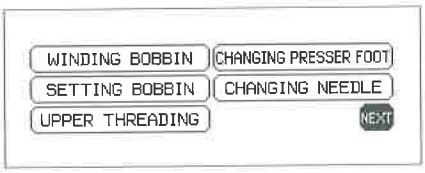

2. Press the **NEXT** key.

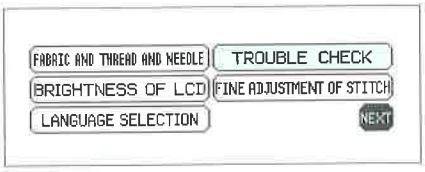

3. Press the **TROUBLE CHECK** key.

4. Press the key describing the problem.

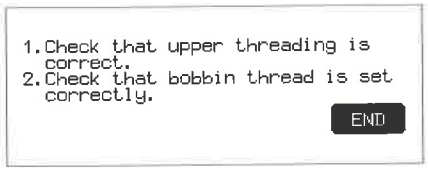

5. Follow the advice to check the sewing machine.
6. Press the **END** key to quit the troubleshooting function.

Mechanical problems

Symptom	Probable cause	Remedy
1. Fabric is not fed properly	1. Feed dogs are lowered.	1. Raise feed dogs.
	2. Combination of selected stitch and presser foot is not correct.	2. Attach correct presser foot.
	3. Correct needle is not being used.	3. Install correct needle.
	4. Thread is entangled.	4. Remove thread ends from race or inner shuttle.
2. Needle breaks	1. Needle is not correctly inserted.	1. Insert needle correctly.
	2. Correct needle is not used.	2. Install proper needle.
	3. Combination of fabric, thread and needle is not correct.	3. Check "FABRIC/THREAD/NEEDLE COMBINATIONS" chart on page 19.
	4. Fabric is pulled too much.	4. Sew without pulling fabric; just guide it.
3. Machine is noisy, or running at a slow speed, or thread trimming is not good	1. Dust is clinging to bottom of needle plate.	1. Remove dust by cleaning with a brush.
4. Machine does not start	1. Start/stop button is not pressed.	1. Press start/stop button.
	2. Machine is turned off.	2. Set main power switch to " I ".
	3. Presser foot is not lowered.	3. Lower presser foot lever.
	4. Check for error messages on LCD.	4. Refer to "ERROR MESSAGES" on page 115.
5. Embroidery unit does not work	1. Machine is turned off.	1. Set main power switch to " I ".
	2. Embroidery unit is not correctly attached.	2. Correctly attach embroidery unit to sewing machine.
	3. Memory card is not inserted.	3. Turn off machine, then insert memory card.
	4. Check for error messages on LCD.	4. Refer to "ERROR MESSAGES" on page 115.
	5. Embroidery unit was not correctly initialized.	5. Refer to "Initializing the embroidery unit" on page 78.

SELECTION KEY	NAME OF PATTERN	PATTERN	TYPE OF PRESSER FOOT	USE	REVERSE/REINFORCEMENT STITCHING	STITCH WIDTH ADJUSTMENT	STITCH LENGTH ADJUSTMENT	AUTOMATIC THREAD CUTTING	AUTOMATIC REVERSE/REINFORCEMENT STITCHING
UTILITY STITCH	Decorative		N	Decorative stitching	△				
				Decorative stitching	△				
			J	Decorative stitching for cuffs made from stretch fabrics	△	★	★	C	T
				Decorative stitching for cuffs made from stretch fabrics	△	★	★	C	T
				Decorative stitching	△	★	★	C	T
				Decorative stitching of thin to medium stretch fabrics	△	★	★	C	T
	Heirloom		N	Decorative hems	△	★	★	C	T
				Decorative hems	△	★	★	C	T
				Decorative hems	△	★	★	C	T
				Decorative hems	△	★	★	C	T
				Decorative hems	△	★	★	C	T
	Satin stitch		N	Decorative hems	△	★	★	C	T
				Decorative hems	△	★	★	C	T
				Decorative hems	△	★	★	C	T
				Decorative hems	△	★	★	C	T
				Decorative hems	△	★	★	C	T
				Decorative hems	△	★	★	C	T
				Decorative hems	△	★	★	C	T
				Decorative hems	△	★	★	C	T

SELECTION KEY	NAME OF PATTERN	PATTERN	TYPE OF PRESSER FOOT	USE	REVERSE/REINFORCEMENT STITCHING	STITCH WIDTH ADJUSTMENT	STITCH LENGTH ADJUSTMENT	AUTOMATIC THREAD CUTTING	AUTOMATIC REVERSE/REINFORCEMENT STITCHING
UTILITY STITCH	Satin stitch		N	Decorative hems	△	★	★	C	T
				Decorative hems	△	★	★	C	T
				Decorative hems	△	★	★	C	T
				Decorative hems	△	★	★	C	T
				Decorative hems	△	★	★	C	T
				Decorative hems	△	★	★	C	T
				Decorative hems	△	★	★	C	T
				Decorative hems	△	★	★	C	T
	Decorative stitch		N	Decorative stitching	△	★	★	C	T
				Decorative stitching	△	★	★	C	T
				Decorative stitching	△	★	★	C	T
				Decorative stitching	△	★	★	C	T
				Decorative stitching	△	★	★	C	T
				Decorative stitching	△	★	★	C	T
				Decorative stitching	△	★	★	C	T
				Decorative stitching	△	★	★	C	T
				Decorative stitching	△	★	★	C	T
				Decorative stitching	△	★	★	C	T

PATTERNS (PROGRAMMED IN MACHINE)

Utility stitches

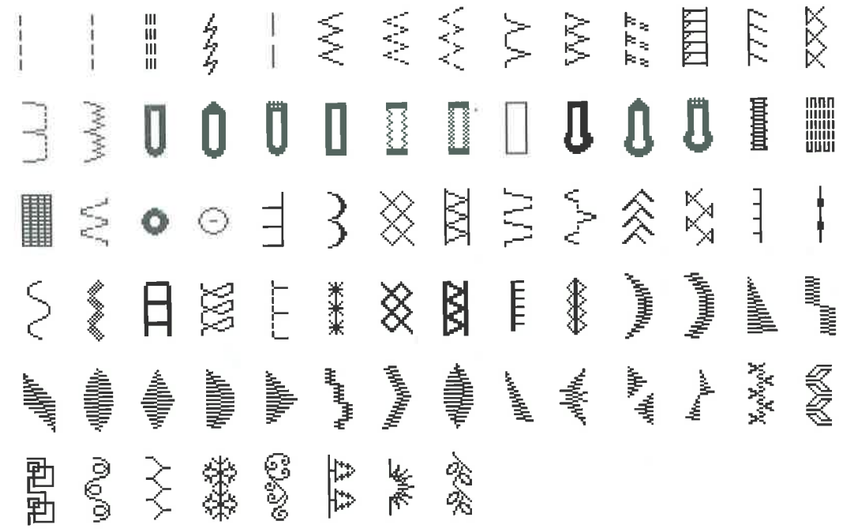

Character embroidering

Sizes: **L** 30 mm (1-3/16"), **M** 15 mm (9/16"), **S** 7.5 mm (1/4")
(Approximate size)

ABCDEFGHIJKLMNOPQRS
TUVWXYZ abcdefghijklm
nopqrstuvwxyz
ÄÅÂÆÑÖØÇÜßäàåâæëèéêñöòøiçüù
0123456789 &?!.-_( )',/

ABCDEFGHIJKLMNOPQRS
TUVWXYZ abcdefghijklm
nopqrstuvwxyz
ÄÅÂÆÑÖØÇÜßäàåâæëèéêñöòøiçüù
0123456789 &?!.-_( )',/

0123456789
ABCDEFGHIJKLMNO
PQRSTUVWXYZ

ENGLISH
194947-01
Printed in T