Enterprise™

Instruction and Reference Guide

Model BNT10L

baby lock

FOR THE LOVE OF SEWING

To register your machine warranty and receive Baby Lock product updates and offers, go to www.babylock.com/profile. If you have questions with registration, visit your Authorized Baby Lock Retailer.

Baby Lock Consumer Helpline: 800-313-4110

www.babylock.com

Trademarks

FlashFX® is a registered trademark of Datalight, Inc.
FlashFX® Copyright 1998-2007 Datalight, Inc.
U.S.Patent Office 5,860,082/6,260,156
FlashFX® Pro™ is a trademark of Datalight, Inc.
Datalight® is a registered trademark of Datalight, Inc.
Copyright 1989-2007 Datalight, Inc., All Rights Reserved
Video powered by Mobiclip™ encoding and playback technology.

IMPORTANT:

READ BEFORE DOWNLOADING, COPYING, INSTALLING OR USING.
By downloading, copying, installing or using the software you agree to this license. If you do not agree to this license, do not download, install, copy or use the software.

Intel License Agreement For Open Source Computer Vision Library

Copyright © 2000, Intel Corporation, all rights reserved. Third party copyrights are property of their respective owners.

Redistribution and use in source and binary forms, with or without modification, are permitted provided that the following conditions are met:

- Redistribution's of source code must retain the above copyright notice, this list of conditions and the following disclaimer.
- Redistribution's in binary form must reproduce the above copyright notice, this list of conditions and the following disclaimer in the documentation and/or other materials provided with the distribution.
- The name of Intel Corporation may not be used to endorse or promote products derived from this software without specific prior written permission.

This software is provided by the copyright holders and contributors "as is" and any express or implied warranties, including, but not limited to, the implied warranties of merchantability and fitness for a particular purpose are disclaimed. In no event shall Intel or contributors be liable for any direct, indirect, incidental, special, exemplary, or consequential damages (including, but not limited to, procurement of substitute goods or services; loss of use, data, or profits; or business interruption) however caused and on any theory of liability, whether in contract, strict liability, or tort (including negligence or otherwise) arising in any way out of the use of this software, even if advised of the possibility of such damage.

All information provided related to future Intel products and plans is preliminary and subject to change at any time, without notice.

Secure Digital (SD) Card is a registered trademark or a trademark of SD Card Association.
CompactFlash is a registered trademark or a trademark of Sandisk Corporation.
Memory Stick is a registered trademark or a trademark of Sony Corporation.
SmartMedia is a registered trademark or a trademark of Toshiba Corporation.
MultiMediaCard (MMC) is a registered trademark or a trademark of Infineon Technologies AG.
xD-Picture Card is a registered trademark or a trademark of Fuji Photo Film Co. Ltd.
IBM is a registered trademark or a trademark of International Business Machines Corporation.
Microsoft, Windows and Windows Vista are registered trademarks or trademarks of Microsoft Corporation.

Each company whose software title is mentioned in this manual has a Software License Agreement specific to its proprietary programs.

All other brands and product names mentioned in this manual are registered trademarks of their respective companies. However, the explanations for markings such as ® and ™ are not clearly described within the text.

Introduction

Thank you for purchasing this embroidery machine. Before using this machine, carefully read the "IMPORTANT SAFETY INSTRUCTIONS", and then study this manual for the correct operation of the various functions.
In addition, after you have finished reading this manual, store it where it can quickly be accessed for future reference.

IMPORTANT SAFETY INSTRUCTIONS

Please read these safety instructions before attempting to use the machine.

DANGER - To reduce the risk of electric shock:

1 **Always** unplug the machine from the electrical outlet immediately after using, when cleaning, when making any user servicing adjustments mentioned in this manual, or if you are leaving the machine unattended.

WARNING - To reduce the risk of burns, fire, electric shock, or injury to persons:

2 **Always** unplug the machine from the electrical outlet when lubricating it or when making any other user servicing adjustments mentioned in the operation manual.

- To unplug the machine, switch the machine to the symbol "O" position to turn it off, then grasp the plug and pull it out of the electrical outlet. **Do not** pull on the cord.
- Plug the machine directly into the electrical outlet. Do not use an extension cord.
- **Always** unplug your machine if the power is cut.

3 **Never** operate this machine if it has a damaged cord or plug, if it is not working properly, if it has been dropped or damaged, or water is spilled on the unit. Return the machine to the nearest authorized retailer or service center for examination, repair, electrical or mechanical adjustment.

- To avoid electric shock or fire; do not use a damaged power supply plug or loose electrical outlet, and ensure that the power supply plug is fully inserted and secure.
- While the machine is stored or in use if you notice anything unusual, such as an odor, heat, discoloration or deformation, stop using the machine immediately and unplug the power cord.
- When transporting the machine, be sure to lift it from the bottom positions. Lifting the machine by any other part may damage the machine or result in the machine falling, which could cause injuries.
- When lifting the machine, be careful not to make any sudden or careless movements, otherwise you may injure your back or knees.
- While the machine is being transported, be careful not to touch the operation panel, thread guides or any other part, otherwise injuries may result.

4 **Always** keep your work area clear:

- **Never** operate the machine with any air openings blocked. Keep ventilation openings of the machine free from the build up of lint, dust, and loose cloth.
- **Do not** use extension cords. Plug the machine directly into the electrical outlet.
- **Never** drop or insert **any** object into **any** opening.
- Keep fingers out of all machine openings, such as near the carriage, otherwise injuries may result.
- **Do not** operate where aerosol (spray) products are being used or where oxygen is being administered.
- **Do not** use the machine near a heat source, such as a stove or iron; otherwise, the machine, power cord or garment being sewn may ignite, resulting in fire or an electric shock.
- **Do not** use this machine near an open flame; the movement of the embroidery frame could cause the garment being sewn to catch fire.
- **Do not** place this machine on an unstable surface, such as an unsteady or slanted table, otherwise the machine may fall, resulting in injuries.
- While attaching or removing an embroidery frame, other accessories or while performing maintenance on the machine, be careful **not** to bump or hit the machine in any way, as this may cause the machine to malfunction or become damaged.

5 Special care is required when sewing:

- **Always** pay close attention to the needle. Do not use bent or damaged needles.
- Keep fingers away from **all** moving parts. Special care is required around the machine needle.
- While the machine is in operation, keep your hands away from the needle bar case and all moving parts near the needle bar case, otherwise injuries may result.
- Switch the machine to the symbol “O” position to turn it off when making any adjustments in the needle area, such as changing the needle.
- **Do not** use a damaged or incorrect needle plate, as it could cause the needle to break.

6 This machine is **not** a toy:

- Your close attention is necessary when the machine is used by or near children.
- This machine is not intended for use by young children or infirm persons without supervision.
- Young children should be supervised to ensure that they do not play with this machine.
- Do not use the included scissors or seam ripper in any other way than how they are intended. In addition, when opening a hole with the seam ripper, do not place your hands or fingers in the cutting path, otherwise injuries may result if the seam ripper slips.
- The plastic bag that this machine was supplied in should be kept out of the reach of children or disposed of. Never allow children to play with the bag due to the danger of suffocation.
- Do not use outdoors.

7 For a longer service life:

- When storing this machine, avoid direct sunlight and high humidity locations. Do not use or store the machine near a space heater, iron, halogen lamp, or other hot objects.
- Use only neutral soaps or detergents to clean the case. Benzene, thinner, and scouring powders can damage the case and machine, and should never be used.
- Always consult the operation manual when replacing or installing any assemblies, needle, or other parts to assure correct installation.

8 For repair or adjustment:

- Do not try to disassemble, repair or alter this machine in any way, otherwise a fire, electric shock or injuries may result.
- If the light unit is damaged, it must be replaced by an authorized retailer.
- In the event a malfunction occurs or adjustment is required, first follow the troubleshooting table in the back of the operation manual to inspect and adjust the machine yourself. If the problem persists, please consult your local authorized Baby Lock retailer.

Use this machine only for its intended use as described in the manual.
Use accessories recommended by the manufacturer as contained in this manual.
Use only the interface cable (USB cable) included with this machine.
Use only a mouse designed specifically for this machine.
The contents of this manual and specifications of this product are subject to change without notice.
For additional product information and updates, visit our website at www.babylock.com

SAVE THESE INSTRUCTIONS

This machine is intended for household use.

This appliance is not intended for use by persons (including children) with reduced physical, sensory or mental capabilities, or lack of experience and knowledge, unless they have been given supervision or instruction concerning use of the appliance by a person responsible for their safety. Children should be supervised to ensure that they do not play with the appliance.

FOR USERS IN THE UK, EIRE, MALTA AND CYPRUS ONLY

IMPORTANT

- In the event of replacing the plug fuse, use a fuse approved by ASTA to BS 1362, i.e. carrying the ASTA mark, rating as marked on plug.
- Always replace the fuse cover. Never use plugs with the fuse cover omitted.
- If the available electrical outlet is not suitable for the plug supplied with this equipment, you should contact your authorized retailer to obtain the correct lead.

Federal Communications Commission (FCC) Declaration of Conformity (For USA Only)

Responsible Party: Tacony Corporation
1760 Gilsinn Lane,
Fenton, Missouri 63026 USA

declares that the product
Product Name: Baby Lock Embroidery Machine
Model Number: BNT10L

complies with Part 15 of the FCC Rules. Operation is subject to the following two conditions: (1) this device may not cause harmful interference, and (2) this device must accept any interference received, including interference that may cause undesired operation.

This equipment has been tested and found to comply with the limits for a Class B digital device, pursuant to Part 15 of the FCC Rules. These limits are designed to provide reasonable protection against harmful interference in a residential installation. This equipment generates, uses, and can radiate radio frequency energy and, if not installed and used in accordance with the instructions, may cause harmful interference to radio communications. However, there is no guarantee that interference will not occur in a particular installation. If this equipment does cause harmful interference to radio or television reception, which can be determined by turning the equipment off and on, the user is encouraged to try to correct the interference by one or more of the following measures:

- Reorient or relocate the receiving antenna.
- Increase the separation between the equipment and receiver.
- Connect the equipment into an outlet on a circuit different from that to which the receiver is connected.
- Consult the retailer or an experienced radio/TV technician for help.
- The included interface cable should be used in order to ensure compliance with the limits for a Class B digital device.
- Changes or modifications not expressly approved by Tacony Corporation could void the user's authority to operate the equipment.

License Agreement

The enclosed machine includes data, software and/or documentation (collectively “CONTENT”) that are proprietary products of Baby Lock, a division of Tacony Corporation (“BABY LOCK”). BY USING THE CONTENT, THE CUSTOMER ACCEPTS THE TERMS AND CONDITIONS OF THIS AGREEMENT. BABY LOCK retains ownership of all rights to CONTENT and to the copies of the CONTENT included in this package. The CONTENT are licensed (not sold) to you (“CUSTOMER”) under the terms and conditions of this Agreement.

CUSTOMER is licensed to:

- Use the CONTENT in combination with an embroidery machine to create embroidery.
- Use the CONTENT in combination with an embroidery machine that CUSTOMER owns or uses, provided that the CONTENT is not used on more than one embroidery machine at a time.
- Use, sell or otherwise distribute the EMBROIDERY created by use of the CONTENT.

Except as otherwise provided herein, CUSTOMER may not:

- Allow more than one copy of the CONTENT to be available for use at any one time.
- Reproduce, modify, publish, distribute, sell, rent, sublicense or otherwise make available to others CONTENT.
- Distribute, rent, sublicense, lease, sell, transfer or assign the media card or CONTENT.
- Decompile, disassemble or otherwise reverse engineer the CONTENT or assist others to do the same.
- Alter, translate, modify or adapt the CONTENT or any part thereof for business, commercial or industrial purposes.

BABY LOCK retains all rights not expressly granted to CUSTOMER herein.

Nothing in this agreement constitutes a waiver of the rights of BABY LOCK under any law. This agreement shall be governed by the laws of the United States of America.

Please direct all inquiries concerning this Agreement in writing by regular mail, to Tacony Corporation, 1760 Gilsinn Lane, Fenton, Missouri 63026, Attention: Sewing machine division Sales and Marketing.

Warning Labels

The following warning labels are on the machine.
Be sure to observe the precautions described in the labels.

1

	⚠CAUTION	⚠VORSICHT	⚠ATTENTION	⚠PRECAUCIÓN	⚠CUIDADO
	Carriage may cause injury. Do not put hands in carriage traveling path.	Um Verletzungen mit dem Stickarm zu vermeiden, nicht die Hände in die Nähe des Stickarms halten.	Le chariot peut provoquer des blessures. Ne pas mettre les mains dans le chemin du chariot.	El carro puede provocar lesiones. No poner las manos por donde pasa el carro.	O carro de transporte pode causar ferimentos. Não coloque as mãos sobre o trilho do carro de transporte.

2

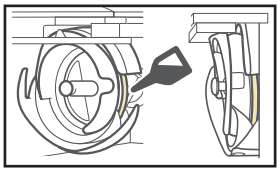

Please put a drop of oil onto the hook once a day before use.

Label locations

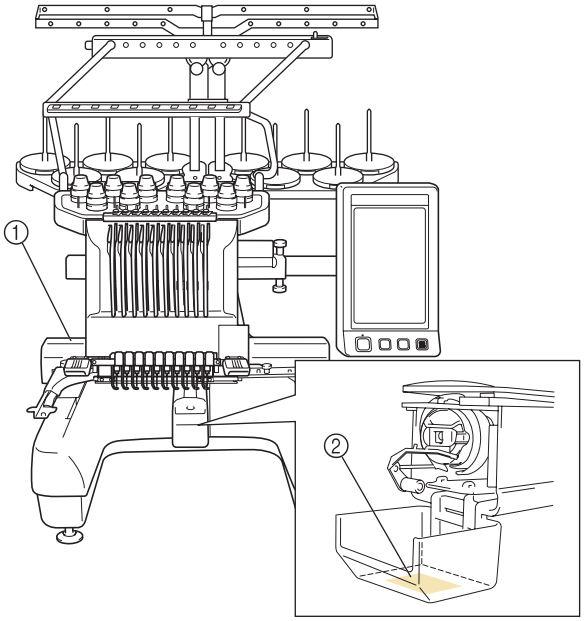

Machine Structure and Features

Ten-needle machine embroidering

Your machine has ten needles, each threaded with a different color of thread. It can sew embroidery patterns that contain several colors by automatically selecting the appropriate needle for each color.
The mechanism that moves the needles up and down is called the needle bar, and the needle bars are in the needle bar case. The needle bars are named from right to left: needle bar 1, needle bar 2, needle bar 3, needle bar 4, needle bar 5, needle bar 6, needle bar 7, needle bar 8, needle bar 9 and needle bar 10.

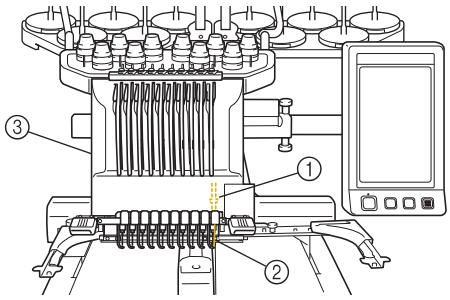

① Needle bar 1
② Needle 1
③ Needle bar case

The machine automatically assigns a thread color to each needle. There are two methods for assigning the thread colors. With the automatic method (default method when the machine is purchased), needles that are already threaded with a color that will be used in the next pattern are assigned to the same thread color based on the needle bar assignments from the previous pattern in order to reduce the number of thread spool changes.
For more professional embroidering, using a manual color sequence allows the needle bar assignments to easily be specified manually. Thread color and needle bar combinations can be selected manually to create a menu so that the needle bar assignments can be based on the thread color numbers. (Refer to “Selecting/Managing Thread Colors for Each Needle Bar (Manual Color Sequence)” on page 132.)

Memo

- Sewing is not necessarily performed in the order of the needle bar numbers.

The thread colors assigned to the needle bars are listed on the screen. Thread the needle bars as indicated.

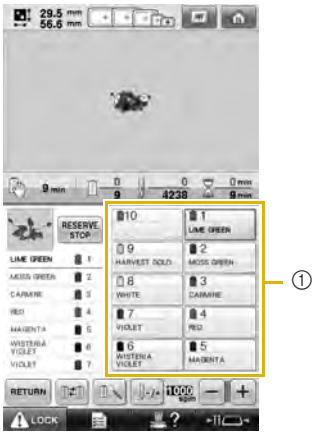

① The threads threaded on the needle bars are indicated as shown here.

The spool pins, thread tension knobs, thread take-up levers and thread paths, mentioned when threading the upper thread, are different according to their corresponding needle bar number.

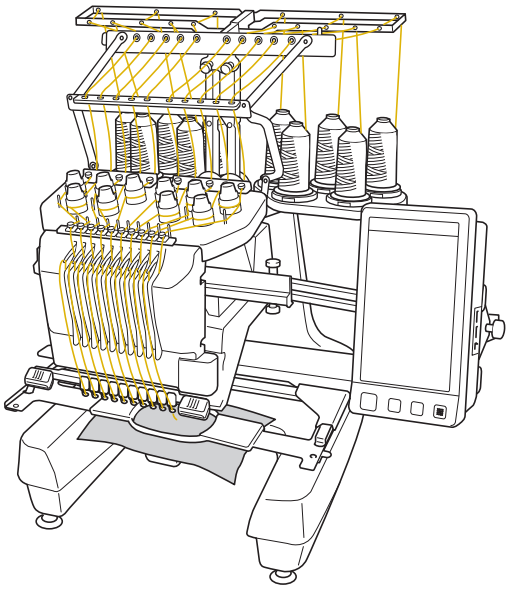

Not all ten needles can be used to sew at the same time. Only one needle is moved to the embroidering position at a time. According to the sewing order, the needle bar case is moved to the left and right so that the needle bar and needle thread with the required color can be moved to the embroidering position.

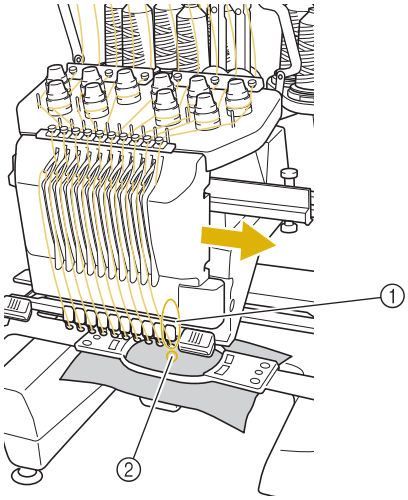

① Needle at the embroidering position
The needle is positioned over the hole in the needle plate ②.

When starting the machine, the presser foot is automatically lowered. The embroidery is sewn and thread is pulled away from the material when thread trimming and when changing thread colors (moving to the different needles to be sewn within the embroidery). When sewing is finished, the machine stops. If the pattern uses eleven or more thread colors, the machine will stop when it is necessary for the thread spools to be changed, and the corresponding instructions appear on the LCD.

(However, when “Manual needle bar sequences” is set to “ON”, the machine does not automatically stop when a thread spool must be changed. For details, refer to “Selecting/Managing Thread Colors for Each Needle Bar (Manual Color Sequence)” on page 132.)

Differences from single-needle machines

■ **Can sew embroidery patterns using ten or less colors without the need to replace the thread spools**
With single-needle machines, the thread spool must be changed and the machine must be threaded each time a different thread color is used. With this machine, it is not necessary to change the thread spool or rethread the machine with embroidery patterns containing ten or less colors. If total colors are less than ten colors, and if total color change is more than eleven times, machine will come back to the needle that the machine is already used and sew the same color again automatically.

■ **Automatic sewing reduces sewing time**
Except to change the thread spools with patterns containing eleven or more colors, once the machine is started, it continues to operate automatically, from lowering the presser foot to performing the specified operations at the starting and end positions in addition to changing the thread colors. Since the machine can change threads and finish stitching, sewing time is reduced.

■ **Automatically pulls and holds the thread tails to the under side of fabric at the beginning and end of stitching**
Since the machine automatically pulls the upper thread under the fabric at the beginning of a color, and pulls the upper thread from the fabric at the time of thread trimming, you don’t need to deal with the upper thread tail at all.

■ **Automatically moves the embroidery frame to the embroidering position**
With a single-needle machine, in most cases, the embroidery pattern is centered in the frame and the fabric must be correctly positioned within the embroidery frame with the center of the desired embroidering position aligned with the center of the embroidery frame. However, with 10 needle embroidery machine, the embroidery frame is moved to determine the embroidering position, making it easier to sew the pattern at any place in the frame. In addition, the embroidering position can be freely determined manually as well as with the camera positioning function after the fabric is hooped and the embroidery frame is attached to the machine, regardless of how the fabric is positioned in the embroidery frame.

Other features

■ **Colorful LED lights enhance the embroidery process**

The LED spool stands, light up individually to transmit sewing information; when the machine is turned on; similar color of the thread for a specific spool, thread breakage on a specific spool, etc. Unique flashing LED lights bring immediate attention to a spool in question eliminating the need to consult the LCD machine screen regularly.

x 2→	indicates the spool that needs changing (Appropriate thread color is indicated. For black thread color, LED light turns off.)
x 2 ↔ x 2	indicates the spool that activates thread breakage error
x 2 ↔ OFF	sewing error
	finished sewing

* Confirm the actual thread color number on the LCD screen. The LED lights indicate the approximate thread color to be used on that particular spool.

■ **Get a clear image of the needle area with the needle-drop point function**

A built-in camera above the needle plate gives a bird's eye view of the needle area. Touch to display the camera view on the LCD screen. It will be much easier to get the accurate needle-drop point.

Furthermore, the machine automatically finds the embroidering position by using the included embroidering positioning sticker. (Refer to "Using the built-in camera" on page 103.)

■ **For your embroidery business -Link function-**

You can send embroidery patterns edited in embroidery editing software provided with the Link function, such as Palette 9 or later, from a computer to an embroidery machine. You can connect 4 machines to a computer at a same time. (Refer to "Sending Embroidery Patterns From a Computer to the Machine (Link Function)" on page 174.)

■ **Easy-to-read and easy-to-use LCD**

Equipped with a large color LCD, the colors of an embroidery pattern can be previewed in a nearly realistic image. In addition, since the LCD is a touch panel, the keys that are displayed can be touched to easily perform operations.

■ **Safety mechanism**

The machine is equipped with a locking mechanism that helps prevent injuries from accidental operation. The machine can only be started after the machine is unlocked. The color of the start/stop button changes to inform you of whether or not the machine is locked.

Lit in red

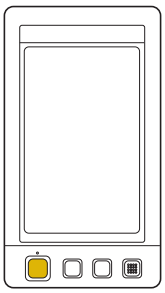

The machine is locked.

Flashing in green

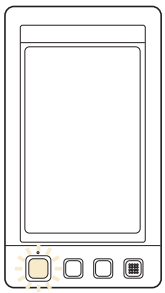

The machine can be started.

■ **Wide selection of built-in thread color information**

The thread color information for manufacturers' threads is available, making it easy to choose the appropriate thread color.

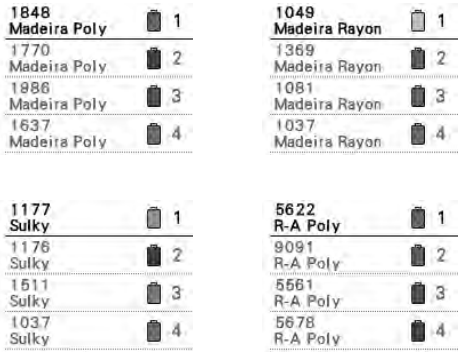

■ **Expanded thread color display feature enables colors to be displayed as realistic true color**
The colors and thread color numbers are stored in the machine's memory. From this thread color library, you can select colors to create your own color thread table. If the pattern colors are changed using this table, the pattern can be displayed with only the thread colors that you have. In addition, the embroidery pattern can be displayed as it would appear after it is embroidered.

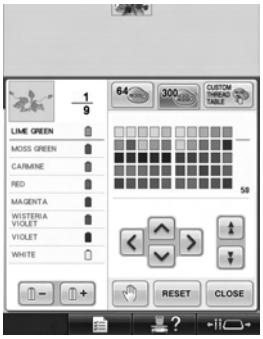

■ **Automatic needle-threading mechanism**
Using the automatic needle-threading mechanism, each needle can easily be threaded.

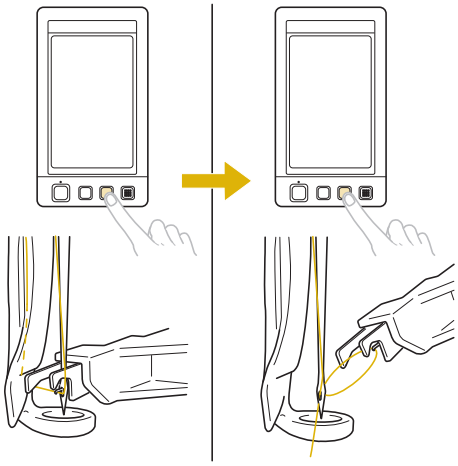

■ **USB port available as standard equipment**
By connecting a computer to the machine using the included USB cable, embroidery patterns can be transferred from the computer. (Refer to "Computer (USB)" on page 166.)

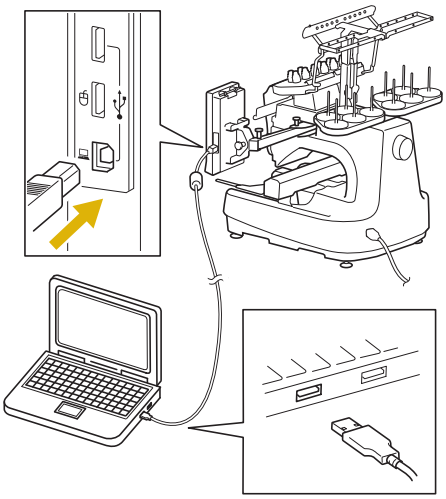

If the machine is positioned at a distance that prevents the USB cable from reaching the computer, embroidery patterns can be transferred from the computer by temporarily saving them on USB media, which is then connected to the machine. (Refer to "USB media" on page 172.)

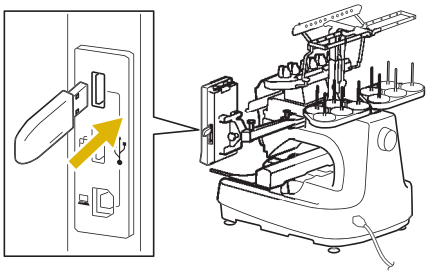

■ **Moving or threading a selected needle bar at any time**
When selecting, editing or embroidering a pattern, any one of the needle bars can be selected at any time to be threaded or moved to the embroidering position.

Touch to open the needle move screen, then select the needle bar number that you want to move or thread. (Refer to "Moving and threading a selected needle bar" on page 62.)

Available features

Designs with a maximum size of 200 mm (H) × 360 mm (W) (7-7/8 inches (H) × 14 inches (W)) can be embroidered. If the optional cap frame is used, embroidery can be sewn on caps.

■ **Manual color sequence - More professional use of this machine**
If you specify the thread colors used with this machine, or if you use DST files frequently, it would be convenient to use the manual color sequence.
(Refer to "Selecting/Managing Thread Colors for Each Needle Bar (Manual Color Sequence)" on page 132.)

■ **Availability of various accessories**
In addition to the 4 embroidery frames included with the machine, there are 3 optional frames (quilt, border and jumbo) that can be used with the included embroidery frame holder B. An optional cap frame is available for caps. The optional cap frame driver is required for the cap hoop. When a round frame is preferred, there is an optional round frame holder C for the optional round frame.
For details on embroidery frames and embroidery frame holders, refer to page 91.

■ **Various built-in patterns**
Many built-in character patterns, embroidery patterns and frame patterns enable you to start embroidering right after purchasing this machine.

■ **Embroidery pattern editing**
Lettering and embroidery patterns can be combined or a text arrangement can be specified to arrange the patterns.
The machine can also be set to repeatedly sew the same pattern.

Manual Structure

This manual is constructed as described below. Before using the machine, check the procedures described with the numbered titles in the title list on the first page of chapter 2. This shows the sequence of these basic operations.

Read before use

Chapter 1: Getting Ready
The setup of the embroidery machine and the various preparations required before starting to sew are described in this chapter.
Chapter 2: Embroidering Tutorial
This chapter describes the basic embroidering operations in order—from turning on the machine and sewing a pattern to finishing sewing. Follow the steps of the tutorial to embroider a pattern and master the operation of this embroidery machine.
Chapter 3: Other Basic Procedures
This chapter provides explanations on operations other than those described in chapter 2, such as sewing a pattern with eleven or more colors, and other necessary operations, for example, changing the needle.

Read when additional information is required

Chapter 4: Embroidering Settings
This chapter contains descriptions on the various embroidering settings, which make editing patterns simple.
Chapter 5: Selecting/Editing/Saving Patterns
This chapter provides details on selecting, editing and saving embroidery patterns.
Chapter 6: Basic Settings and Help Feature
This chapter contains descriptions on the use of the settings key, the machine operations key and the help key. Details on changing the basic embroidery machine settings and viewing operations on the LCD will be provided.
Chapter 7: Appendix
This chapter provides descriptions of techniques for various embroidering operations, pointers for creating beautiful embroidery, and details on maintenance procedures and corrective measures that should be taken when a problem occurs.

Searching for information

■ **Searching the manual**

By title
Check the descriptions at the left for the contents of each chapter, and then check the table of contents.
For basic operations, refer to the list of titles on the first page of chapter 2. Find the appropriate page by using the thumbtabs on the right edge of the pages.
By keyword
Search the index at the end of this manual. Look for the desired keyword, and then refer to the page that is indicated.
By screen
Descriptions of the keys and other information that appear in the main LCD screens are provided in the tables on pages 71 to 80. For details, refer to the page that is indicated.
By condition
Various possible conditions and the corresponding operations are described on page 81. For details, refer to the page that is indicated.

■ **Searching the machine**

This machine is equipped with a help feature.

Learning how to perform an operation
Touch the machine operations guide key, and then check for the desired information. (Refer to “Using the Machine Operations Guide Key” on page 230.)

Contents

Introduction **1**
IMPORTANT SAFETY INSTRUCTIONS **1**
License Agreement **6**
Warning Labels **7**
Machine Structure and Features **8**
Ten-needle machine embroidering 8
Differences from single-needle machines 9
Other features 10
Available features 12
Manual Structure **13**
Read before use 13
Read when additional information is required 13
Searching for information 13

GETTING READY 19

Names of Machine Parts and Their Functions **20**
Front view 20
Right-side/rear view 21
Operation panel 21
Accessories **22**
Included accessories 22
Optional accessories 24
Setting Up the Machine **26**
Setup and transporting precautions 26
Setup location 27
Setting up the machine 28
Remove the fixing plates 29
Adjusting the operation panel position 29
Preparing the thread guide assembly 30
Preparing the spool stand 31
Attaching the embroidery frame holder 32

EMBROIDERING TUTORIAL 33

Operating Precautions **34**
Power supply precautions 34
Needle precautions 35
Checking the needle 35
Bobbin precautions 35
Upper thread recommendations 36
Fabric recommendations 36
Display recommendations 36
Basic Procedures **37**
Installing the Bobbin **38**
Removing the bobbin case 38
Installing the bobbin 38
Installing the bobbin case 39
Turning ON the Machine **40**
Understanding the screens 41
Screen overview 42
Selecting an Embroidery Pattern **44**
Selecting an embroidery pattern 45
Editing the Embroidery Pattern **46**
Continuing to the embroidering settings screen 46
Specifying Embroidering Setting **47**
Previewing the Image **48**
Checking a preview image 48

Hooping the Fabric in the Embroidery Frame **49**
Hooping the fabric in the embroidery frame 49
Attaching the Embroidery Frame to the Machine **51**
Attaching the embroidery frame 51
Checking the Embroidery Area **53**
Temporarily stopping to check the area 53
Continuing to the embroidering screen 53
Upper Threading **54**
Checking the needle bars and thread colors 54
Upper threading 56
Threading the needle 60
Sewing the Embroidery **64**
Starting embroidering 64
Stopping embroidering 66
Checking the Thread Tension **68**
Removing the Embroidery Frame and Fabric **69**
Removing the embroidery frame 69
Removing the fabric 69
Turning OFF the Machine **70**
Screen Quick Reference Guide **71**
Key displays 71
Common screen controls 71
Understanding the pattern type selection screen 72
Understanding the pattern list screen 73
Understanding the pattern editing screen 74
Understanding the embroidering settings screen 76
Understanding the embroidering screen 79
When You Have a Question, This May Help You **81**
Technical Terms 81
Patterns 81
Embroidering 81
USB connectivity 82
USB mouse operation 84

OTHER BASIC PROCEDURES 87

Changing the Needle **88**
Replacing the needle 88
Correctly Using the Embroidery Frames **90**
Embroidery frame holders 90
When difficult to replace the embroidery frame 90
Types of embroidery frames/frame holders and their applications 91
Attaching Iron-On Stabilizer (Backing) to Fabric **93**
Hooping the Fabric **94**
Hooping the fabric in the extra-large and large embroidery frames 94
Using the embroidery sheet 95
Large/small pieces of fabric 96
Embroidery Frame Position and Movement **97**
Changing the Embroidering Position **99**
Adjusting the angle 100
Aligning the Embroidering Position **103**
Using the built-in camera 103
Using the included embroidery positioning sticker 105
Switching the Thread Colors on the Screen **108**
Embroidering a Pattern Containing Eleven or More Colors **110**
Checking if thread spool changes are necessary 111
Changing the Thread Spools with Designs of Eleven or More Colors **113**
Change thread spools message and spool thread indicators 113
Easily changing the thread spools 114
If the Thread Breaks or the Bobbin Thread Runs Out While Embroidering **115**
If the upper thread breaks 115

If the bobbin thread breaks or runs out 117
Embroidering From the Beginning or Middle of the Pattern 118
Resume Embroidering After Turning Off the Machine 120
Adjusting the Thread Tension 122
Adjusting the tension of the bobbin thread 122
Adjusting the tension of the upper thread 123

EMBROIDERING SETTINGS 125

Basting Embroidery 126
Creating an Appliqué Piece 127
Creating an appliqué piece 127
Using a frame pattern for the outline 130
Selecting/Managing Thread Colors for Each Needle Bar (Manual Color Sequence) 132
Convenience of the manual color sequence 132
Specifying the manual color sequence 132
Using the manual color sequence 133
Precautions on the manual color sequence 133
Automatic Lock Stitch Setting 134
Starting/Ending Position Settings 135
Repeatedly sewing a pattern along a diagonal 136
Embroidering linked characters 137
Maximum Sewing Speed Setting 139
Setting the Machine to Stop at Color Changes 140
Stopping the machine at the next color change 140
Specifying pause locations before embroidering 140
Temporary Needle Bar Setting 142
Uninterrupted embroidering (monochrome) 143
Reserved Needle Bar and Sewing Speed Settings 145

SELECTING/EDITING/SAVING PATTERNS 149

Precautions 150
Concerning embroidery data 150
Concerning optional embroidery cards 152
Concerning USB media 152
Selecting an Embroidery Pattern 153
General pattern selection 153
Embroidery patterns 154
Frame patterns 154
Monogram and frame designs 155
Alphabet patterns 159
Floral alphabet patterns 162
Greek alphabet patterns 163
Embroidery patterns stored in the machine memory 163
Embroidery cards (optional) 164
Computer (USB) 166
Connecting the USB using the included USB cord clamps 170
USB media 172
Sending Embroidery Patterns From a Computer to the Machine (Link Function) 174
Operations available with the Link function 174
Embroidering using the Link function 175
Disabling the Link function 178
Editing the Embroidery Pattern (Pattern Editing Screen) 179
Enlarge the pattern image on the screen 179
Combining patterns 179
Selecting the pattern to be edited 180
Moving a pattern 181
Flipping a pattern horizontally 182
Changing the size of a pattern 182
Rotating a pattern 183
Changing the text arrangement of a character 184

Changing the character spacing 185
Separating combined character patterns 186
Trimming the threads between characters 187
Changing the thread density (only for selected character and frame patterns) 187
Specifying multi-color text 188
Changing the colors of the pattern 188
Designing repeated patterns 190
Creating a custom thread table 198
Choosing a color from the custom thread table 200
Duplicating a pattern 201
Editing patterns as a group 202
Deleting a pattern 202
Editing the Embroidery Pattern (Embroidering Settings Screen) 203
Rotating the entire pattern 203
Editing a Combined Pattern 204
Saving Embroidery Patterns 209
Machine's memory 209
If the embroidery pattern cannot be saved 209
USB media 211
Computer (USB) 212

BASIC SETTINGS AND HELP FEATURE 215

Using the Settings Key 216
Understanding the settings screen 216
Changing the display guides 218
Changing the thread color information 220
Selecting the thread color information for "PES" format data 221
Specifying the thumbnail size 222
Changing the background colors of the embroidery patterns or thumbnails 222
Specifying jumpstitch trimming / "DST" jump codes for trimming 223
Deleting short stitches 224
Specifying the remaining length of thread 225
Changing the screen saver settings 225
Adjusting the brightness of the sewing light 227
Changing the speaker volume 227
Specifying the spool stand LED setting 228
Specifying thread sensor 228
Changing the pointer shape when a USB mouse is used 229
Changing the units of measurements 229
Changing the language 229
Using the Machine Operations Guide Key 230

APPENDIX 233

Appliqué Sewing 234
Sewing appliqué patterns 234
Using a frame pattern to create appliqués (1) 235
Using a frame pattern to create appliqués (2) 236
Sewing Large-size (Split) Embroidery Patterns 238
Helpful Tips for the Operation of the Machine 241
Checking the thread tension of built-in patterns 241
Sewing a pattern aligned with a mark on the fabric 242
Color thread table 244
Colors of Tajima (.dst) embroidery data 244
Creating Beautiful Embroidery 245
Threads 245
Stabilizers (backing) 245
Hooping techniques 247
Fabric/stabilizer compatibility chart 248

OPTIONAL ACCESSORIES 249

Embroidery Patterns for the Optional Jumbo Frame 249

Using the Optional Cap Frame 253
Cap frame and its accessories 253
Types of caps 254
Fabric precautions 255
Preparing to use the cap frame 255
Attaching the cap frame 261
Installing the embroidery frame holder 269
Additional digitizing information 270
Using the Optional Bobbin Winder 272
Precautions 272
Optional bobbin winder and its accessories 272
Setting up the optional bobbin winder 273
Connecting the AC adapter 273
Winding the bobbin 274
Maintenance 277
Cleaning the LCD 277
Cleaning the machine surface 277
Cleaning the hook 277
Cleaning around the needle plate 278
Cleaning the bobbin case 279
Cleaning the thread paths of the upper threads 280
Oiling the machine 282
About the maintenance message 283
Troubleshooting 284
On-screen troubleshooting 284
Troubleshooting 285
Error messages 293
If the machine does not respond when a key is pressed 302
Specifications 303
Embroidery machine specifications 303
Upgrading Your Machine's Software 304
Upgrade procedure using USB media 304
Upgrade procedure using computer 305
Index 307

1 GETTING READY

After unpacking the machine, first refer to “Accessories” on page 22, and check that all listed accessories are included. After checking that all accessories are included, the embroidery machine can be set up.
The setup of the machine and the various preparations required before starting to sew are described in this chapter.

Names of Machine Parts and Their Functions 20
Front view 20
Right-side/rear view 21
Operation panel 21
Accessories 22
Included accessories 22
Optional accessories 24
Setting Up the Machine 26
Setup and transporting precautions 26
Setup location 27
Setting up the machine 28
Remove the fixing plates 29
Adjusting the operation panel position 29
Preparing the thread guide assembly 30
Preparing the spool stand 31
Attaching the embroidery frame holder 32

Names of Machine Parts and Their Functions

The names of the various parts of the sewing machine and their functions are described below. Before using the sewing machine, carefully read these descriptions to learn the names of the machine parts.

Front view

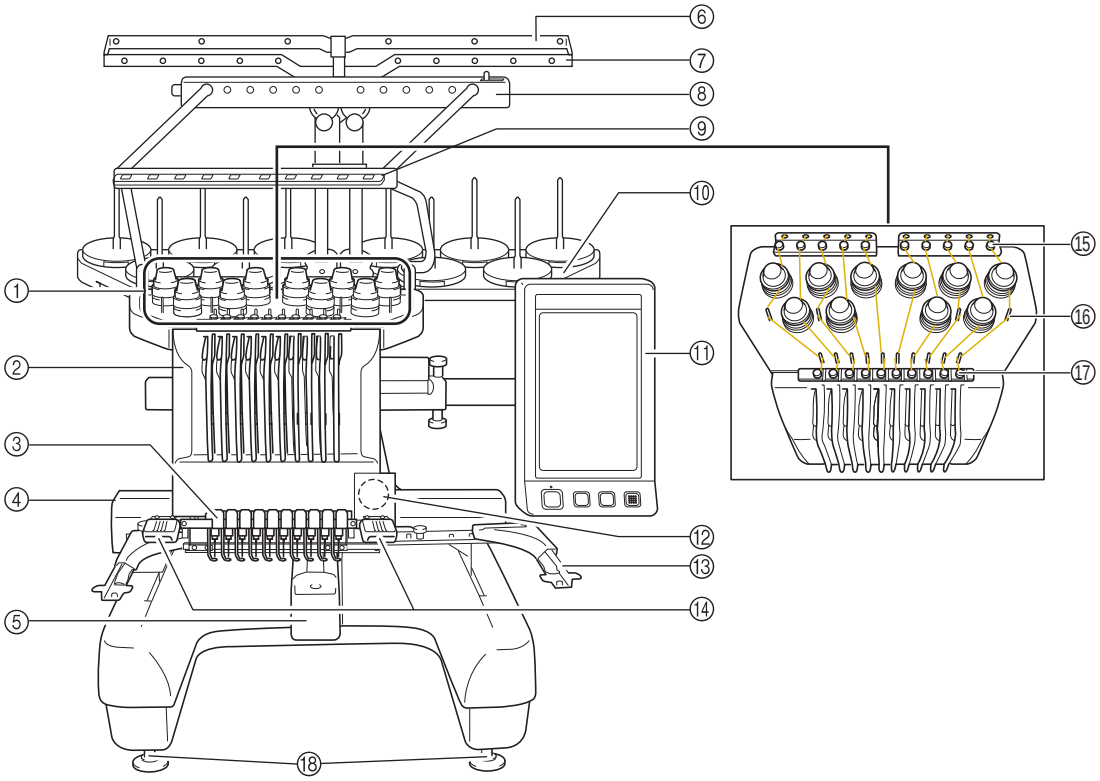

① **Thread tension knobs**
Adjust the tension of the thread.

② **Needle bar case**
Moves to the left and right to move the needle to the embroidering position.

③ **Lower thread guide**

④ **Carriage**
Attach the embroidery frame to the carriage. When the machine is turned on or when the machine is embroidering, the carriage moves forward, backward, left and right.

⑤ **Hook cover/Hook**
Open the hook cover, and then insert the bobbin case into the hook.

⑥ **Thread guide A**

⑦ **Thread guide B**

⑧ **Thread guide C**

⑨ **Thread guide D**

⑩ **Spool stand**
Put 10 thread spools to embroider.

⑪ **Operation panel**

⑫ **Built-in camera**

⑬ **Embroidery frame holder**

⑭ **Sewing light**
The brightness of the sewing light can be adjusted in the settings screen.

⑮ **Upper thread guide**

⑯ **Thread guide pins**

⑰ **Middle thread guide**

⑱ **Feet**
Use the feet to adjust the height of the legs.

Right-side/rear view

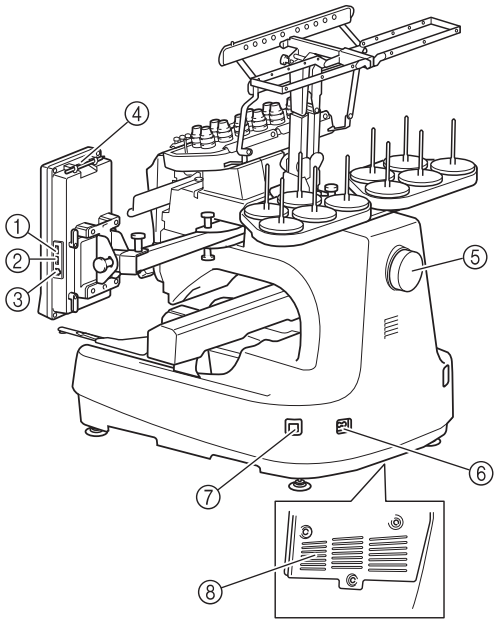

Bottom

① **Primary (top) USB port for media**
In order to send patterns from/to USB media, plug the USB media directly into the USB port.

② **USB port for mouse**

③ **USB port for computer**
In order to import/export patterns between a computer and the machine, plug the USB cable into the USB port.

④ **Touch pen holder**
Use the touch pen holder to hold the touch pen when not in use.

⑤ **Handwheel**
Rotate the handwheel to move the needle up and down. Be sure to rotate the handwheel toward the LCD panel (counterclockwise).

⑥ **Power supply plug**
Insert the plug on the power supply cord into the power supply plug.

⑦ **Main power switch**
Use the main power switch to turn the machine ON (I) and OFF (O).

⑧ **Ventilation slots**

Operation panel

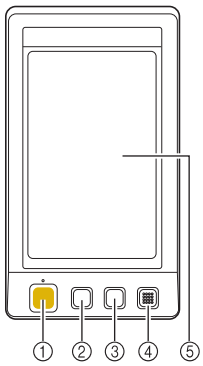

① **Start/Stop button**
Press the start/stop button to start or stop the machine. The lighting status and color of the button changes depending on the operation condition of the machine.

Lit in red	:	When the machine cannot start sewing
Flashing in green	:	When the machine can start sewing
Lit in green	:	While the machine is sewing
Off	:	When the machine is turned off

② **Thread trimming button**
Press the thread trimming button to trim both the upper and the bobbin threads.

③ **Automatic needle-threading button**
Press the automatic needle threading button to thread the needle.

④ **Speaker**

⑤ **LCD (touch panel)**
Touch the keys that appear on the touch panel to select and edit patterns and confirm various information.

Accessories

The accessories listed below are included with this machine. Make sure to use the accessories designed for this machine.

Included accessories

After opening the box, check that the following accessories are included. If any item is missing or damaged, contact your Baby Lock retailer.

	Part Name Part Code
1.	**Accessory case** XC6482-051
2.	**Needle set × 2** XC6469-001
3.	**Prewound bobbin × 6** XC6368-051
4.	**Spool net × 10** S34455-000
5.	**Seam ripper** X54243-051
6.	**Scissors** XC1807-121
7.	**Tweezers** XC6542-051
8.	**Touch pen** XA9940-051
9.	**Needle changing tool (Threader)** XE8362-001
10.	**Needle plate spacer** XC6499-151

	Part Name Part Code
11.	**Phillips screwdriver** XC6543-051
12.	**Standard screwdriver** X55468-051
13.	**Allen screwdriver** XC5159-051
14.	**Offset screwdriver** XC6545-051
15.	**Disc-shaped screwdriver** XC1074-051
16.	**Wrench 13 × 10** XC6159-051
17.	**Oiler** XZ0206-051
18.	**Cleaning brush** X59476-051
19.	**Weight** XC5974-151
20.	**USB cord clamp × 2** XE8396-002

	Part Name Part Code
21.	**Spool mat × 10** XC7134-051
22.	**Spool cap × 10** 130012-054
23.	**USB cable** XD1851-051
24.	**Embroidery frame (extra-large) 200 mm (H) × 360 mm (W) (7-7/8 inches (H) × 14 inches (W))** ENF360
25.	**Embroidery frame (large) 130 mm (H) × 180 mm (W) (5-1/8 inches (H) × 7-1/8 inches (W))** EPF180
26.	**Embroidery frame (medium) 100 mm (H) × 100 mm (W) (4 inches (H) × 4 inches (W))** EPF100
27.	**Embroidery frame (small) 40 mm (H) × 60 mm (W) (1-1/2 inches (H) × 2-3/8 inches (W))** EPF60
28.	**Embroidery sheet (extra large) 200 mm (H) × 360 mm (W) (7-7/8 inches (H) × 14 inches (W))** XE7158-001
29.	**Embroidery sheet (large) 130 mm (H) × 180 mm (W) (5-1/8 inches (H) × 7-1/8 inches (W))** XC5721-051
30.	**Embroidery sheet (medium) 100 mm (H) × 100 mm (W) (4 inches (H) × 4 inches (W))** XC5759-051
31.	**Embroidery sheet (small) 40 mm (H) × 60 mm (W) (1-1/2 inches (H) × 2-3/8 inches (W))** XC5761-051
32.	**Embroidery positioning sticker sheets** BLSO-EPS

	Part Name Part Code
33.	**Embroidery frame holder A (with white corner cover)** XE7374-001
34.	**Embroidery frame holder B (with light gray corner cover)** XE7376-001
35.	**Instruction and reference guide** This manual
36.	**Quick reference guide** XF0037-001
37.	**Power cord** XE7256-001

CAUTION

- **Be sure to use the included power cord for this machine. Using any other power cord may result in damage.**

Memo

- The included touch pen can be stored in the touch pen holder on the back of the operation panel. Refer to page 21.

Optional accessories

The following are available as optional accessories.

	Part Name Part Code
1.	**Wide cap frame set (Refer to page 253.)** ENCFS
2.	**Wide cap frame 60 mm (H) × 360 mm (W) (2-3/8 inches (H) × 14 inches (W))** ENCF
3.	**Advanced cap frame 2 set** EPCF3
4.	**Advanced cap frame 2 60 mm (H) × 130 mm (W) (2-3/8 inches (H) × 5-1/8 inches (W))** EPCF-B
5.	**Advanced cap frame 50 mm (H) × 130 mm (W) (2 inches (H) × 5-1/8 inches (W))** EPCF-A
6.	**Mounting jig** EPCFJ
7.	**Cylinder frame set** BMP-CFS

	Part Name Part Code
8.	**Cylinder frame 80 mm (H) × 90 mm (W) (3 inches (H) × 3-1/2 inches (W))** BMP-CF
9.	**Quilt frame 200 mm (H) × 200 mm (W) (7-7/8 inches (H) × 7-7/8 inches (W))** ENF200
10.	**Border frame 100 mm (H) × 300 mm (W) (4 inches (H) × 11-3/4 inches (W))** ENBF
11.	**Jumbo frame 360 mm (H) × 360 mm (W) (14 inches (H) × 14 inches (W))** ENJF
12.	**Round frame set** ENRFS
13.	**Round frame (∅100 mm (4 inches))** ENRF100
14.	**Round frame (∅130 mm (5 inches))** ENRF130
15.	**Round frame (∅160 mm) (6 inches))** ENRF160
16.	**Embroidery frame holder C (with dark gray corner covers)** ENRF-ARMC
17.	**Flat frame 200 mm (H) × 300 mm (W) (7-7/8 inches (H) × 11-3/4 inches (W))** BMP-FF

	Part Name Part Code
18.	**Embroidery frame (extra-large) 200 mm (H) × 300 mm (W) (7-7/8 inches (H) × 11-3/4 inches (W))** EPF300
19.	**Embroidery table** ENTABLE
20.	**Metal bobbin** 100376-053
21.	**Embroidery card reader** BLECR
22.	**Bobbin winder set (Refer to page 272.)** EPBW1
23.	**Embroidery card** –
24.	**USB mouse** XE4904-001
25.	**Embroidery positioning sticker sheets** BLSO-EPS
26.	**Card Reader Holder** XE6620-001

Note

- Visit your nearest Baby Lock retailer for a complete listing of optional accessories and embroidery cards available for your machine.

Memo

- Always use accessories recommended for this machine.
- All specifications are correct at the time of printing. Please be aware that some specifications may change without notice.

Setting Up the Machine

The procedures for setting up the machine are described below. If the machine is not set up correctly, it may shake or produce loud noises and the embroidery will not be sewn correctly. An optional sewing stand is also available.

Setup and transporting precautions

CAUTION

- **The temperature of the operating environment should be between 5 °C (40 °F) and 40 °C (104 °F). If the machine is operated in an environment that is either too cold or too hot, the machine may malfunction.**
- **Do not use the machine in a location where it will be exposed to direct sunlight, otherwise the machine may malfunction.**
- **Set up the machine with it's four adjustable feet completely in contact with the desk or table, so that the machine is level.**
- **Do not put anything under the embroidery machine that could block the ventilation slots found on the rear underside of the machine, in order to avoid the possibility of the machine's motor overheating, resulting in a fire or in damage to the machine.**
- **The machine weight is approximately 42 kg (92 lb). The transporting or setting up of the embroidery machine should be performed by two people.**
- **When transporting the machine, be sure to have two people lift the machine from the bottom at the indicated slots (①). Lifting the machine from any other area may damage the machine or result in the machine falling, which could cause injuries.**

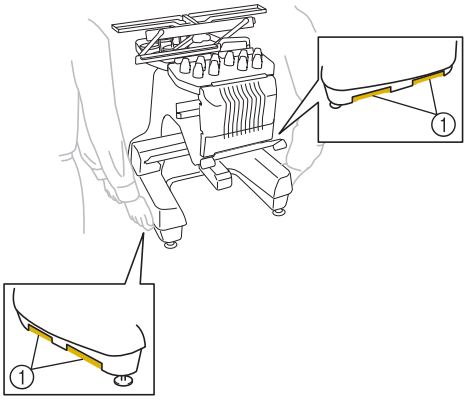

- **When lightning occurs, turn off the machine and unplug the power supply cord. Lightning may cause the machine to malfunction.**
- **Do not plug in the power supply cord until setup of the machine is completed, otherwise injuries may result if the start/stop button is accidentally pressed and the machine starts sewing.**
- **When lubricating the machine, wear protective eyeglasses and gloves to prevent the oil or grease from getting into your eyes or on your skin. Do not put the oil or grease into your mouth. Keep the oil and grease out of the reach of children.**
- **While attaching or detaching an embroidery frame or other included accessory or while maintaining the machine, be careful not to hit the machine with your body or any other part of it.**

Setup location

Set up the machine in a location that meets the following requirements.

- Position the machine a minimum of 50 mm (2 inches) away from the wall
- Allow sufficient space around the machine
- Place no objects within the moving range of the embroidery frame
- Set-up machine near an electrical outlet
- Use a level and stable surface, such as a desk or stand.
- Use a surface that can support the weight of the machine (about 42 kg (92 lb))
- Allow open space around the ventilation slots found on the rear underside of the machine

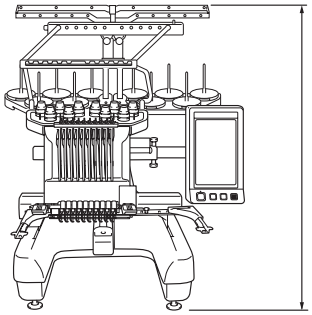

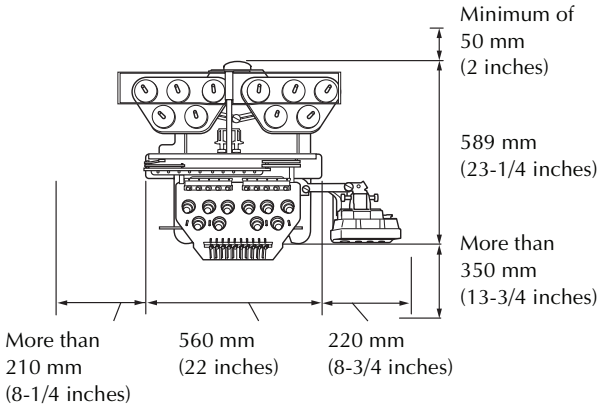

CAUTION

- **In order to prevent malfunctions or damage, do not set up the machine in a location exposed to the following conditions.**

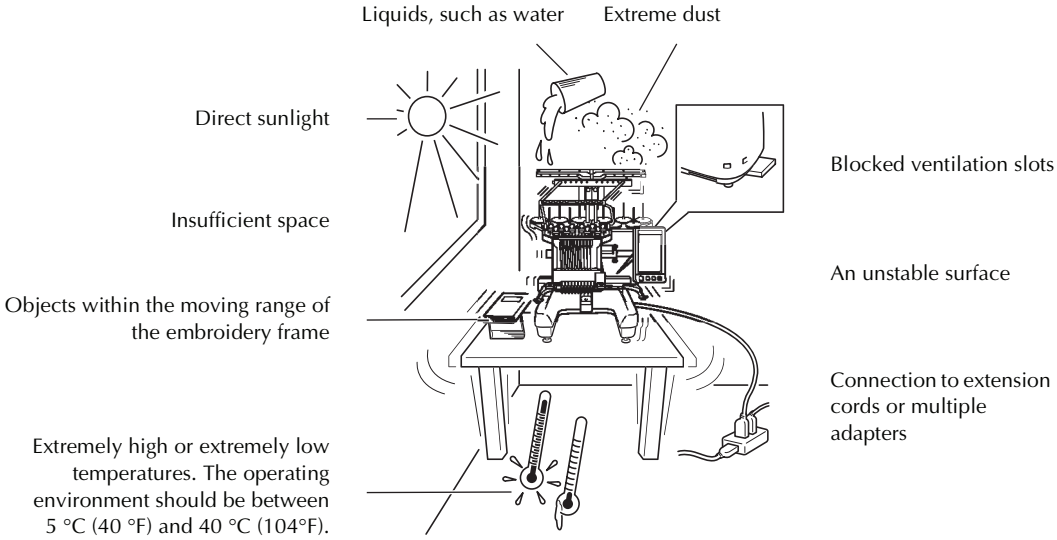

Note

- For your safety: Since the machine weighs approximately 42kg (92 lb), do not set it up on an unstable table or desk.

Setting up the machine

When setting up the machine, adjust the legs so that the machine is steady.

1 Make sure that all packing tape affixed to the machine is peeled off and that all packing material is removed.

2 Set up the machine while making sure that there is sufficient space around it.

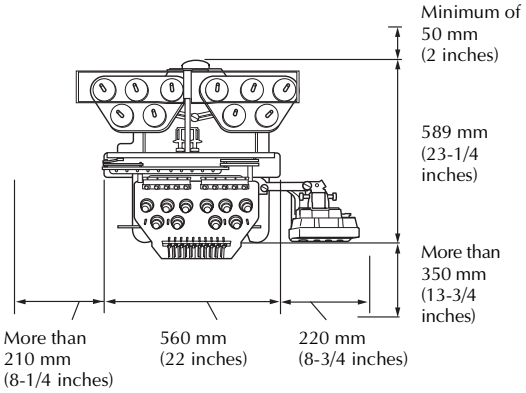

3 Adjust the legs so that the machine is steady.
Use the included wrench to loosen the lock nut on the leg that you wish to adjust.

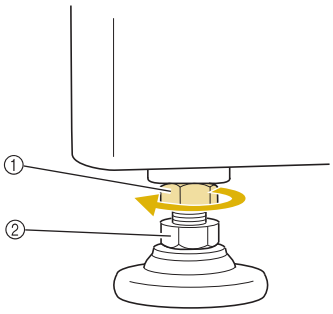

① Lock nut
② Adjustable foot nut

▶ The foot can be turned.

4 Use the included wrench to turn the adjustable foot nut on the foot.
Turning the nut in direction ❶ lengthens the leg; turning the nut in direction ❷ shortens the leg.

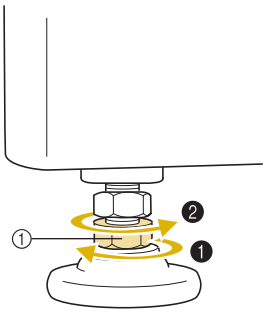

① Adjustable foot nut

- Adjust all four legs so that they securely contact the desk or table, and the machine is level.

5 After adjusting the legs to the desired length, use the included wrench to tighten the nuts.

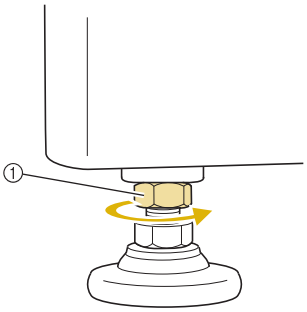

① Lock nut

6 Press down on each corner of the embroidery machine to check that it is stable.
If it is still unstable, perform steps 3 through 5 again to adjust the legs.

Remove the fixing plates

CAUTION

- **Remove the fixing plates before turning on the machine, otherwise the machine may malfunction.**

1 **Using the included Phillips screwdriver, remove each of screws on the fixing plates.**

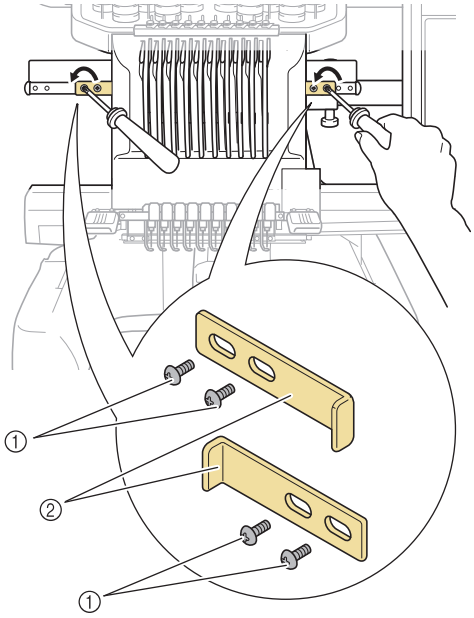

① Screws
② Fixing plates

Memo

- After removing the fixing plates, be sure to keep them to be used again. Before transporting the machine, consult your authorized Baby Lock retailer.

Adjusting the operation panel position

Adjust the orientation and angle of the operation panel so it can easily be operated.

1 **Loosen 2 thumb screws to bring the operation panel forward.**

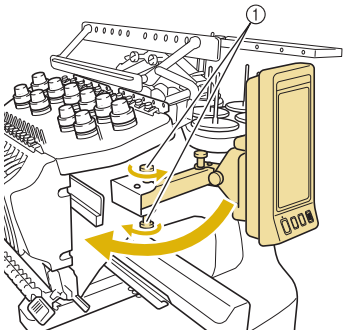

① Thumb screws

2 **Adjust the operation panel to an easy-to-operate position, and then tighten the thumb screws.**

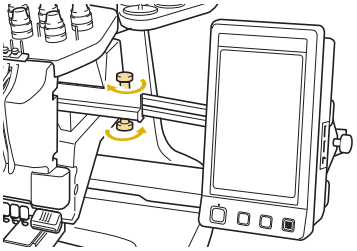

3 **Adjust the orientation of the operation panel.**
Loosen the thumb screw, adjust the operation panel to an easy-to-view orientation, and then tighten the thumb screw.

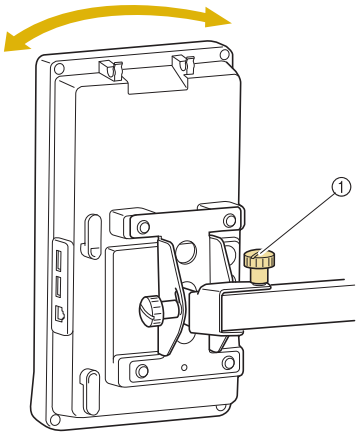

① Thumb screw

4 **Adjust the angle of the operation panel.**
Loosen the 2 thumb screws behind the operation panel, adjust the operation panel to an easy-to-view angle, and then tighten the thumb screws.

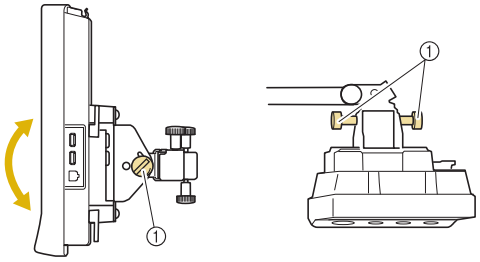

(Side view) (Top view)

① Thumb screws

Note

- Using the disc-shaped screwdriver included, loosen and firmly tighten the five thumb screws.

Preparing the thread guide assembly

Raise the thread guide assembly.

CAUTION

- **When setting up the thread guide assembly, set it up with the needle bar 6 position selected, otherwise the machine may malfunction. (Refer to "Moving and threading a selected needle bar" on page 62 for moving the needle bar.)**

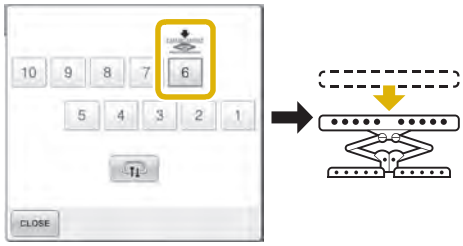

1 **Loosen the two thumb screws on top of the thread guide assembly support.**

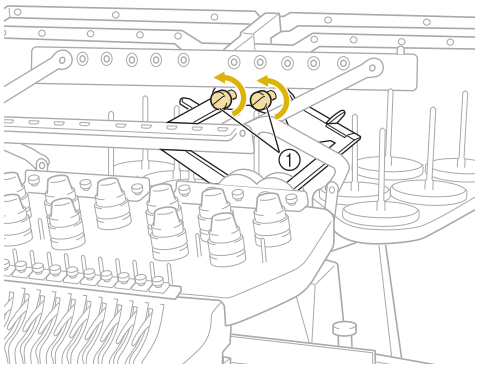

① Turn the screw counterclockwise three or four times to loosen it.

2 **Grab the grips on the thread guide assembly support and push toward the middle.**

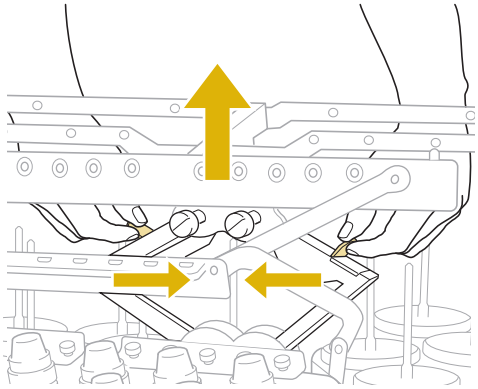

3 **After the thread guide assembly support is extended and the thread guide assembly is raised to its highest position, tighten the two thumb screws to secure the thread guide assembly in place.**

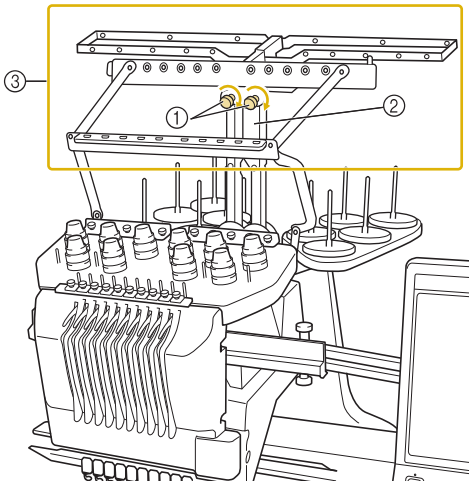

① Tighten screw.
② Thread guide assembly support
③ Thread guide assembly

Note

- If the thumb screws are not loosened enough, it may not be easy to move the thread guide assembly support. Do not apply extreme force when moving the thread guide assembly support. Be sure that the thumb screws are loosened well enough before moving the part.
- Be sure to tighten each thumb screw well enough that the thread guide assembly support is secured.

Preparing the spool stand

Secure the spool stand in place for embroidering. Use the included disc-shaped screwdriver.

1 **Loosen the thumb screw two or three turns, and then fold out the spool stand.**

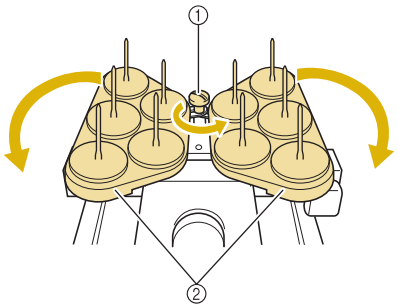

① Thumb screw
② Spool stand

2 **After the spool stand is fully opened up, tighten the thumb screw.**

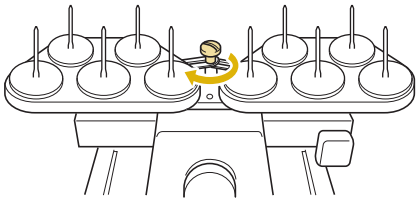

▶ Secure the spool stand in the opened position.

Attaching the embroidery frame holder

Attach the embroidery frame holder to the carriage.

1 **Use the embroidery frame holder appropriate for the embroidery frame that you are using. (Refer to page 90 to 92.)**

2 **Remove the two thumb screws of the embroidery frame holder.**

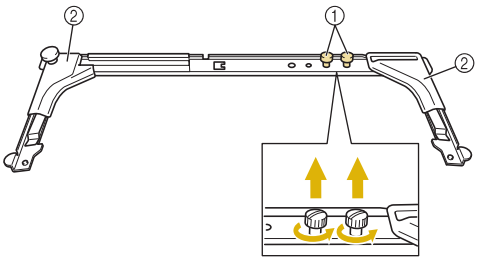

① Thumb screws
② Corner covers

3 **Align the holes in the embroidery frame holder with the pins on the frame-mounting plate of the carriage.**

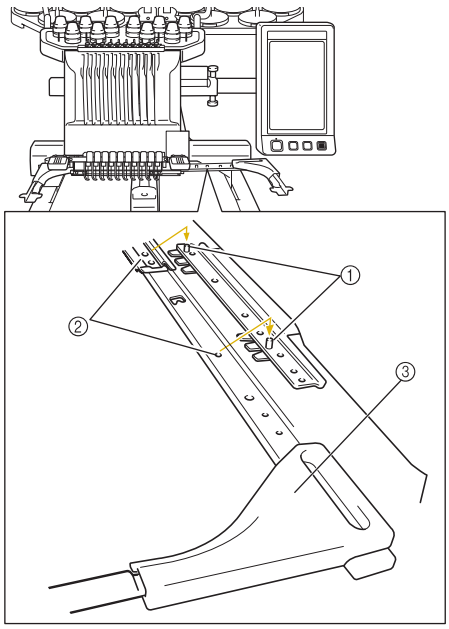

① Pins on the frame-mounting plate
② Holes in the embroidery frame holder
③ Corner covers

Note

- Each embroidery frame holder has different color of corner cover.
  Holder A: White corner covers
  Holder B: Light gray corner covers
  Holder C: Dark gray corner covers
  (Optional)

4 **Secure the embroidery frame holder with the two thumb screws removed in step 2.**

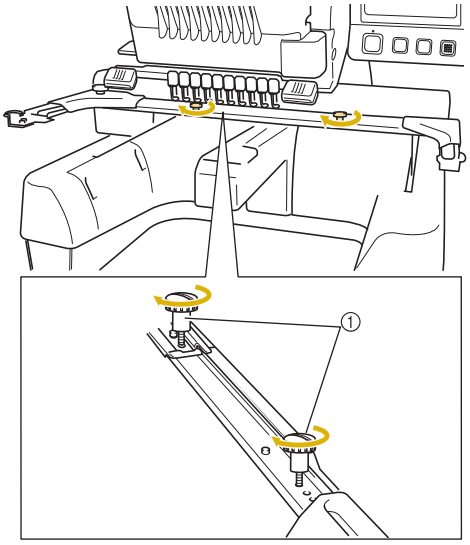

① Thumb screws

Note

- Using the disc-shaped screwdriver included, firmly tighten the thumb screws.
- Two types of embroidery frame holders are included with this machine.
  Embroidery frame holder A is used with the four included embroidery frames.
  (Refer to “Correctly Using the Embroidery Frames” on page 90 for the details.)

This completes the preparation of the machine.

2

EMBROIDERING TUTORIAL

This chapter describes the basic embroidering operations in order—from turning on the machine and sewing a pattern to finishing sewing. Follow the steps of the tutorial to embroider a pattern and master the operation of this embroidery machine.

Operating Precautions 34
Power supply precautions..... 34
Needle precautions..... 35
Checking the needle 35
Bobbin precautions..... 35
Upper thread recommendations 36
Fabric recommendations 36
Display recommendations 36
Basic Procedures 37
1.Installing the Bobbin 38
Removing the bobbin case..... 38
Installing the bobbin 38
Installing the bobbin case 39
2.Turning ON the Machine 40
Understanding the screens..... 41
Screen overview 42
3.Selecting an Embroidery Pattern 44
Selecting an embroidery pattern 45
4.Editing the Embroidery Pattern 46
Continuing to the embroidering settings screen 46
5.Specifying Embroidering Setting..... 47
6.Previewing the Image..... 48
Checking a preview image..... 48
7.Hooping the Fabric in the Embroidery Frame 49
Hooping the fabric in the embroidery frame 49
8.Attaching the Embroidery Frame to the Machine 51
Attaching the embroidery frame..... 51
9.Checking the Embroidery Area..... 53
Temporarily stopping to check the area.....53
Continuing to the embroidering screen 53
10.Upper Threading 54
Checking the needle bars and thread colors 54
Upper threading 56
Threading the needle 60
11.Sewing the Embroidery..... 64
Starting embroidering 64
Stopping embroidering 66
12.Checking the Thread Tension 68
13.Removing the Embroidery Frame and Fabric 69
Removing the embroidery frame..... 69
Removing the fabric..... 69
14.Turning OFF the Machine..... 70
Screen Quick Reference Guide 71
Key displays..... 71
Common screen controls 71
Understanding the pattern type selection screen 72
Understanding the pattern list screen 73
Understanding the pattern editing screen..... 74
Understanding the embroidering settings screen 76
Understanding the embroidering screen..... 79
When You Have a Question, This May Help You 81
Technical Terms 81
Patterns..... 81
Embroidering 81
USB connectivity 82
USB mouse operation 84

Operating Precautions

The necessary points to ensure the correct operation of this machine are described below.

Power supply precautions

Be sure to observe the following precautions concerning the power supply.

WARNING

- **Use only regular household electricity for the power source. Using other power sources may result in fire, electric shock, or damage to the machine.**
- **Make sure that the plugs on the power supply cord are firmly inserted into the electrical outlet and the power supply cord receptacle on the machine.**
- **Do not insert the plug on the power supply cord into an electrical outlet that is in poor condition.**
- **If any of the following occur, turn off the embroidery machine and unplug the power supply cord, otherwise a fire, an electric shock or damage to the machine may result.**
  - **When you are away from the machine.**
  - **After using the machine.**
  - **If a power outage occurs while the machine is being operated.**
  - **If the machine is not operating properly, for example, when there is a loose or cut connection.**
  - **During electrical storms.**

CAUTION

- **Use only the power supply cord included with this machine.**
- **Do not plug this machine in with extension cords or multi-plug adapters with any other appliances plugged into them, otherwise a fire or an electric shock may result.**
- **Do not plug in or unplug the power supply cord with wet hands, otherwise an electric shock may result.**
- **When unplugging the power supply cord, be sure to first turn off the machine, and then grasp the plug when unplugging the cord. Pulling on the cord may damage it or result in a fire or an electric shock.**
- **Do not allow the power supply cord to be cut, damaged, modified, forcefully bent, pulled, twisted, or bundled. In addition, do not place heavy objects on the cord or expose it to heat, otherwise damage to the cord, fire or an electric shock may result. If the power supply cord or its plug is damaged, stop using the machine, and then take the machine to your authorized retailer for repairs before continuing use.**
- **If the machine is not to be used for a long period of time, unplug the power supply cord, otherwise a fire may result.**
- **When leaving the machine unattended, either the main switch of the machine should be turned to OFF or the plug must be removed from the socket-outlet.**
- **When servicing the machine or when removing covers, the machine must be unplugged.**

- **For U.S.A only**
  This appliance has a polarized plug (one blade wider than the other). To reduce the risk of electrical shock, this plug is intended to fit in a polarized outlet only one way.
  If the plug does not fit fully in the outlet, reverse the plug. If it still does not fit, contact a qualified electrician to install the proper outlet. Do not modify the plug in any way.

Needle precautions

Be sure to observe the following precautions concerning the correct choice of needle for your machine.

CAUTION

- **Your machine is designed to use household embroidery needles. The factory recommended needle is "HAX 130 EBBR" (Organ). Schmetz needles 130/705 H-E may be used as a substitute. Use of any other needles may break the needle or thread or damage the needle-threading mechanism or result in injuries.**
- **Never use bent needles. Bent needles can easily break, possibly resulting in injuries.**

Checking the needle

Sewing with a bent needle is extremely dangerous since the needle may break while the machine is operating.
Place the flat side of the needle on a flat surface and check that the distance between the needle and the flat surface is even. If the needle is bent or the tip of the needle is broken, replace the needle with a new one. (Refer to "Changing the Needle" on page 88.)

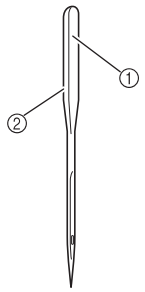

■ **Good needle**

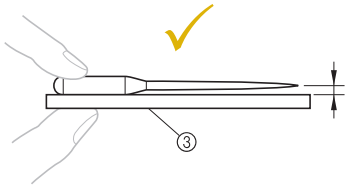

■ **Bad needle**

If the distance between the needle and the flat surface is not even, the needle is bent. Do not use a bent needle.

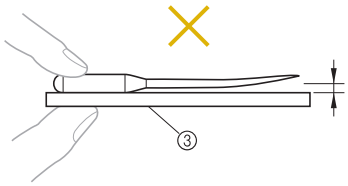

① Flat side
② Needle type marking
③ Flat surface

Bobbin precautions

Be sure to observe the following precautions concerning the bobbin.

CAUTION

- **Only use prewound bobbin (COATS "L" type/TRU-SEW POLYESTER "Filaments") or bobbins designed specifically for this machine. Use of any other bobbin may result in injuries or damage to the machine.**

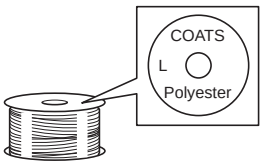

- **Use a bobbin thread that has been correctly wound, otherwise the needle may break or the thread tension will be incorrect.**

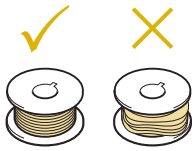

- **When winding a bobbin, only use optional bobbin winder (refer to page 272) and metal bobbins (Part code: 100376-053).**
- **When winding the bobbin, be sure to use cotton or spun polyester bobbin thread (between 74 dtex/2 and 100 dtex/2).**

Upper thread recommendations

Be sure to observe the following recommendations concerning the upper thread.

Note

- It is recommended that rayon or polyester embroidery thread be used (120 den x 2 / 135 dtex x 2 / 40 weight (in Americas and Europe) / #50 (in Japan)).

Fabric recommendations

Be sure to observe the following recommendations concerning the fabric.

Note

- Your machine can embroider fabric that is up to 1 mm (1/16 inch) thick. If thicker fabric is sewn, the needle may bend or break.
- When embroidering overlapping stitches, it is difficult for the needle to penetrate the fabric, possibly resulting in the needle bending or breaking.
- Attach stabilizers to thin or stretch fabrics. (Refer to “Attaching Iron-On Stabilizer (Backing) to Fabric” on page 93 for information.)
- When embroidering large pieces of fabric, make sure that the fabric is not caught in the carriage.

Display recommendations

Be sure to observe the following recommendations concerning the use of the operation panel display.

Note

- Only touch the display with your finger or included touch pen. Do not use a mechanical pencil, screwdriver or any other hard or sharp object. In addition, do not apply extreme pressure to the display screen, otherwise damage to the display screen may result.

Memo

- If you are not directly facing the operation panel display, the colors may be distorted or the display may be difficult to read. This is a normal characteristic of the display and is not a malfunction. Be sure to sit in front of the display while using it. (Refer to “Adjusting the operation panel position” on page 29, if adjusting is necessary.)

Basic Procedures

Basic embroidering procedures are described below.
Check the overall procedure below, before operating the embroidery machine.

Step	Operation	Tutorial Reference Page	Operating Procedure Reference Page
1	Install the bobbin.	p. 38	p.35
2	Turn on the machine.	p. 40	p.34, 36
3	Select an embroidery pattern.	p. 44	
4	Edit the embroidery pattern.	p. 46	
5	Specify the embroidering settings.	p. 47	
6	Check the previewed image.	p. 48	
7	Hoop the fabric in the embroidery frame.	p. 49	p. 36
8	Attach the embroidery frame to the machine.	p. 51	
9	Check the embroidery area.	p. 53	
10	Thread the upper threads.	p. 54	p.36
11	Unlock the machine, then press the start/stop button to start embroidering. (Once embroidering is completed, the machine automatically stops.)	p. 64	
12	Check the thread tension.	p. 68	
13	Remove the embroidery frame, and then remove the fabric from the frame.	p. 69	
14	Turn off the machine.	p. 70	

The operations to embroider the pattern are described on the following pages.
Although embroidering can continue without the pattern being edited or embroidering settings being specified, refer to page 179 for details on editing the patterns, and refer to page 125 for details on specifying embroidering settings.
Descriptions of the keys and other information that appear in the main LCD screens are provided in the tables on pages 71 to 80. Use these tables for quick reference.

The various operating precautions that must be observed during the basic procedures are provided on pages 34 to 36. These precautions must be strictly observed in order for the machine to function properly. Make sure to read these precautions.

1. Installing the Bobbin

When the machine is purchased, only the bobbin case is installed in the hook. Insert a bobbin wound with bobbin thread for embroidering. For precautions concerning the bobbin, refer to page 35.

Note

- The machine does not indicate how much bobbin thread is remaining. Before starting to embroider make sure that there is enough bobbin thread for the pattern.
- Make sure to clean the bobbin case every time the bobbin is changed. For details on cleaning the bobbin case, refer to "Cleaning the bobbin case" on page 279.

Removing the bobbin case

1 Open the hook cover.
Pull the hook cover toward you.

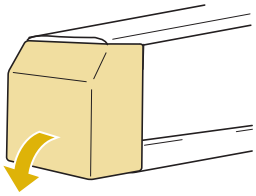

2 Pull the thread picker toward you if it is not already in forward position.

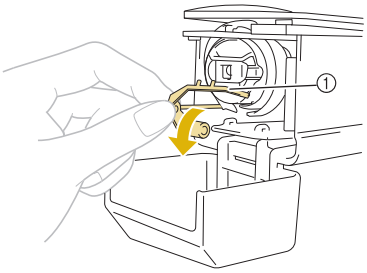

① Thread Picker
To gain access to the bobbin case easily, pull the thread picker toward the front.

Memo

- Thread picker is a device that is used to hold the thread when beginning to sew or when trimming the thread.

CAUTION

- **The thread picker can only be moved within a certain range. Do not pull it with extreme force.**

3 Grab the bobbin case latch, and remove the bobbin case.

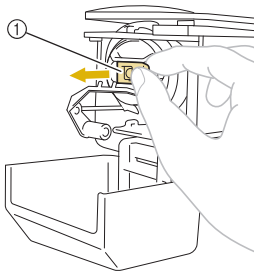

① Latch

■ **Oiling the machine**
After removing the bobbin case, apply oil to the machine. The race should be oiled. For details on oiling the machine, refer to "Oiling the machine" on page 282.

Note

- Put a drop of oil onto the hook once a day before use.

Installing the bobbin

Memo

- This embroidery machine is not equipped with a bobbin-winder. Use pre-wound (L type) bobbins.
- The optional bobbin winder (stand-alone type) and optional metal bobbins can also be used. (Refer to page 24, 272.)

1 **Insert the bobbin into the bobbin case.**

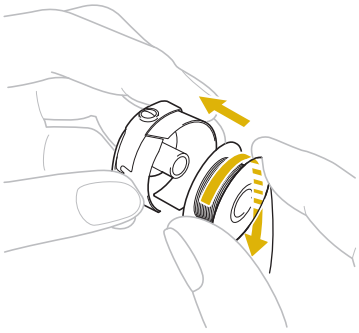

Note

- Check that the thread winds off the bobbin clockwise as shown in the illustration. If the bobbin is installed with the thread winding off in the opposite direction, the embroidery will not be sewn correctly.

2 **Pass the thread through the thread slit and under the tension-adjusting spring.**

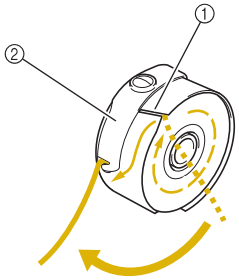

① Thread slit
② Tension-adjusting spring

3 **Pull the thread about 50 mm (2 inches) through the opening in the tension-adjusting spring.**

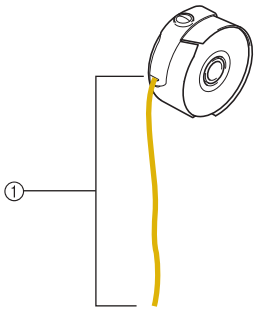

① About 50 mm (2 inches).

Installing the bobbin case

1 **Insert the bobbin case into the hook.**
Insert the bobbin case while aligning the tab on the bobbin case with the notch in the hook, as shown in the illustration.

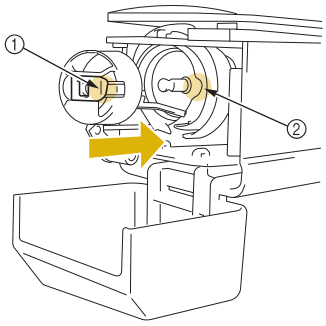

① Tab
② Notch

2 **Fully insert the bobbin case until it snaps into place.**

3 **Close the hook cover.**

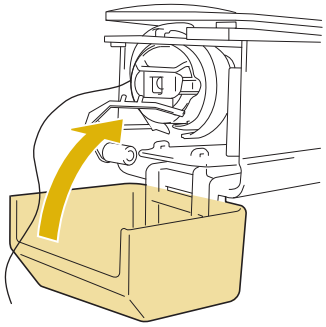

2. Turning ON the Machine

Connect the power supply cord, and then turn on the embroidery machine. For precautions concerning the power supply, refer to page 34.

CAUTION

- **Be sure to use the included power cord for this machine. Using any other power cord may result in damage.**

1 Plug the power supply cord into the machine.

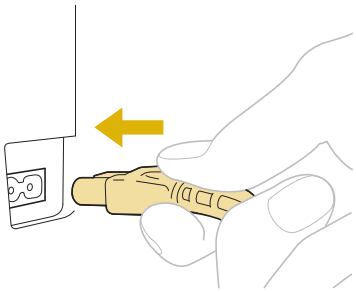

2 Insert the plug of the power supply cord into a household electrical outlet.

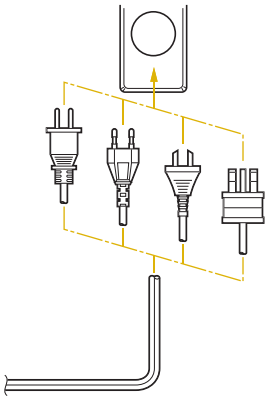

3 Switch on the main power switch on the back of the machine to "I".

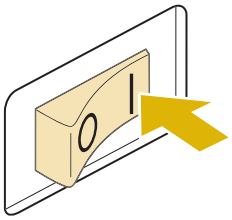

▶ The LCD screen comes on.

4 When the machine is turned on, the opening movie is played. Touch anywhere on the screen to display the message below.

5 Touch OK.

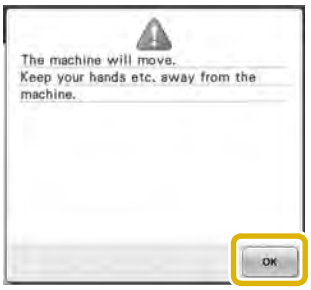

▶ The pattern type selection screen appears, and the start/stop button lights up in red.

6 The carriage moves to its initial position.

- If the number 1 needle bar is not already at the embroidering position, the needle bar case moves and the number 1 needle bar moves to the embroidering position.

CAUTION

- **Make sure to keep your hands and other items away from the carriage, in order to prevent any injuries.**

Memo

- If the machine is turned off in the middle of embroidering, the machine will automatically save the design position when turned on again. At that time, you will be asked if you wish to continue embroidering or begin a new operation. (Refer to "Resume Embroidering After Turning Off the Machine" on page 120.)

Understanding the screens

When the machine is turned on and OK is touched, the pattern type selection screen appears. The operations described below will be entered using the operation panel. For precautions concerning the use of the touch panel, refer to page 36.

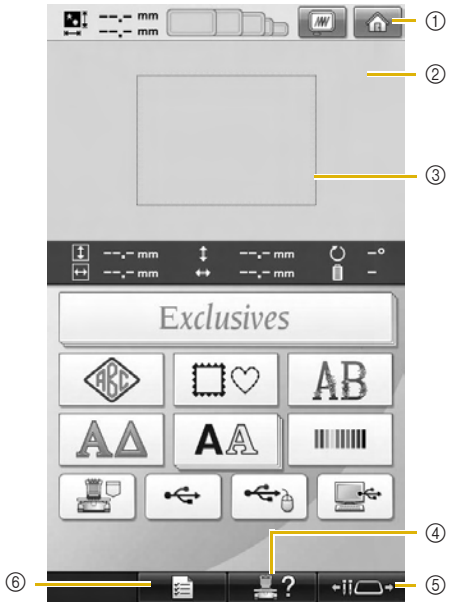

No.	Display	Key Name	Function	Reference Page
①		Home key	Touch this key to cancel all operations previously performed and return to the initial pattern group selection screen.	
②		Pattern display area	This area displays the selected pattern.	p. 218
③		Embroidering area line	Shows the available embroidering area. The embroidery frame indications, the grid lines and other display settings can be specified from the machine settings screen.	p. 218
④		Machine operations guide key	Touch this key to check a machine operation.	p.230
⑤		Needle bar/Frame move key	Touch this key to move or thread a selected needle bar, or to position the carriage so the embroidery frame can easily be removed or attached.	p.30, 62, 90
⑥		Settings key	Touch this key to change the embroidery machine settings.	p. 216

* The keys in the table above appear and can be used in most of the screens described later in this manual.

Screen overview

The basic operation flow is shown below.

In the **pattern type selection screen**, select a pattern type. (Refer to page 44, 72.)

In the **pattern list screen**, select the pattern. (Refer to page 44, 73.)

① Touch this key to return to the **pattern type selection screen**.
② Touch this key to continue to the **pattern editing screen**.

In the **pattern editing screen**, edit the pattern. (Refer to page 46, 74.)

① Touch this key to return to the **pattern type selection screen** and add another pattern.
② Touch this key to continue to the **embroidering settings screen**.

In the **embroidering settings screen**, if it is a combined pattern, edit the entire pattern, specify the embroidering settings and check the embroidery area. (Refer to page 47, 76.)

① Touch this key to return to the **pattern editing screen**.
② Touch this key to continue to the **embroidering screen**.

In the **embroidering screen**, check the thread colors assigned to the needle bars, and then install the upper threads. Touch LOCK to unlock the machine so that the start/stop button starts flashing in green. The embroidery machine is now ready to begin sewing.

① Touch this key to return to the **embroidering settings screen**.
② Unlock key

After the embroidery pattern is sewn, a "Finished sewing" message screen appears. Touch OK to return to the **embroidering settings screen**. (Refer to page 47, 76)

3. Selecting an Embroidery Pattern

As an example, we will select the pattern shown at the right.

In the pattern type selection screen, select a pattern category (type).
Pattern type selection screen (For details on the keys and other information on the screen, refer to page 72.)

① Pattern type keys

In the pattern list screen, search for the desired pattern, and then touch the key for the pattern.
Pattern list screen (For details on the keys and other information on the screen, refer to page 73.)

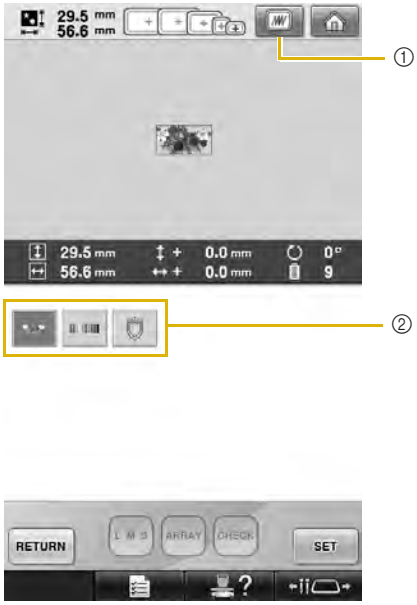

① Displays a preview image.
② Pattern keys

■ Checking a preview image from the pattern list screen

Touch to preview the image prior to selecting.

Touch to return to the pattern list screen.

Selecting an embroidery pattern

1 **Touch** **to select the embroidery patterns category.**

▶ The pattern list screen appears.

2 **Touch the desired pattern.**

In this case, touch .

▶ The selected pattern appears in the pattern display area.

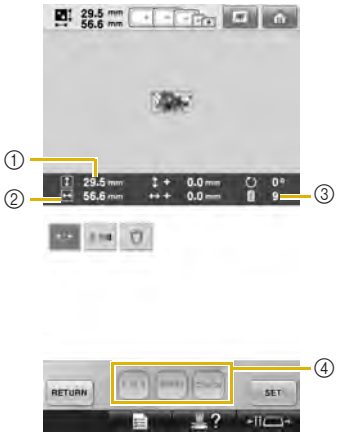

After a pattern is selected, the following appear:

① Vertical length of the pattern
② Horizontal width of the pattern
③ Number of thread color changes
④ These keys can be used to change the monogram frame size or change the text arrangement of a character. The functions may be used differently depending on the type of pattern that is selected.

(Refer to “Changing the size of a pattern” on page 182.)

- If the wrong pattern was selected or you wish to select a different pattern, touch the desired pattern.

3 **Touch** **to display the next screen.**

This confirms the pattern selection.

▶ The pattern editing screen appears.

4. Editing the Embroidery Pattern

From this screen, the pattern can be edited.
Pattern editing screen (For details on the keys and other information on the screen, refer to page 74.)

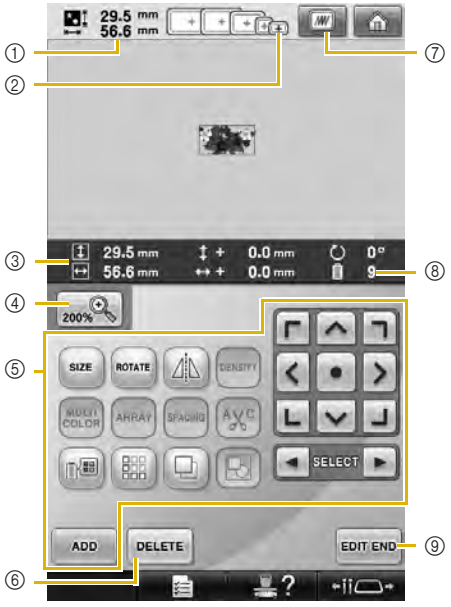

① Shows the size of the embroidery pattern currently displayed in the pattern display area. The top value shows the height and the bottom value shows the width. If the embroidery pattern consists of multiple patterns that have been combined, the size of the entire pattern, including all patterns, is shown.
② Highlights the sizes of embroidery frames that can be used to sew the currently selected embroidery pattern.

Memo

- If the embroidery frame holder is not attached to the machine, the embroidering area will not display the correct frame size. (Refer to page 51.)

③ Shows the size of the currently selected embroidery pattern.
The top value shows the height and the bottom value shows the width.
④ Press the Enlarge key to change the size of the on screen embroidery image presentation.
⑤ Touch to edit the pattern.
⑥ Touch this key to delete the pattern, for example, if the wrong pattern was selected. No pattern is selected and the pattern type selection screen appears.
⑦ Displays a preview image.
⑧ Shows the number of thread color changes for the currently selected embroidery pattern
⑨ Continues to the next screen.

In this example, we will not edit the pattern. Without performing any editing operations, continue to the next screen.

Continuing to the embroidering settings screen

1 **Press** EDIT END .

▶ The embroidering settings screen is displayed.

5. Specifying Embroidering Setting

From this screen, the entire pattern can be edited and embroidering settings can be specified. In addition, the embroidering position can be checked and a pattern can be saved for later use.

Embroidering settings screen (For details on the keys and other information on the screen, refer to page 76.)

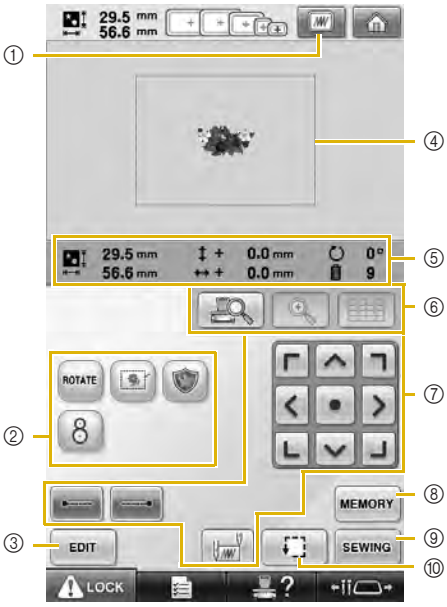

① Displays a preview image.
② Touch for additional editing functions.
③ Returns to the pattern editing screen.
④ In the embroidering settings screen, the embroidery frame guide in the pattern display area indicates the size of the embroidery frame selected in settings screen.
⑤ Image on the Design Page shows image size, rotation, number of thread changes and measured position of image within the embroidery area.
⑥ Touch to check the needle drop point on the LCD screen.
⑦ Touch these keys to specify how the pattern will be embroidered.
⑧ Touch to store the pattern in memory.
⑨ Continues to the next screen
⑩ Touch to check the embroidering area.

In this example, we will not specify any of the embroidering settings. Continue with the next operation.

Note

- Available keys are not the same if you set "Manual Color Sequence" to "ON" in the settings screen. For details on the keys and other information on the screen, refer to page 78.

Memo

- If the embroidery frame is not positioned correctly when continuing to the embroidering settings screen, the embroidery frame is moved to the correct position at the same time that the embroidering settings screen is displayed. (Refer to "Moving to the correct position" on page 98.)

6. Previewing the Image

You can view an image of the completed pattern within the embroidery frame.

Checking a preview image

Display the preview image to check that the embroidery will be sewn as desired.

1 **Touch .**

▶ The preview image is displayed.

① Touch this key to display an enlarged view of the pattern.

Memo

- A preview image in a landscape orientation cannot be rotated to a portrait orientation, even if there is space at the top and bottom.

2 **Touch ◄ or ► to select the type of embroidery frame holder, and then select the embroidery frame you are going to use.**

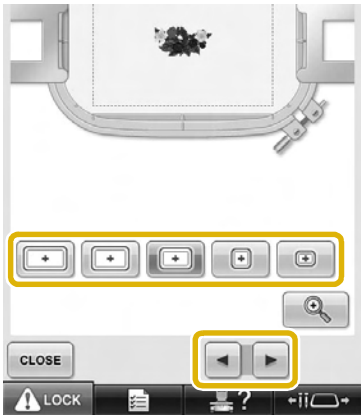

- If you find out the type of embroidery frame holder and size of embroidery frame which are best for your embroidery, select the display guides in the settings screen for your better embroidery editing (Refer to page 91 and 218.).

3 **Touch CLOSE to return to the previous screen.**

Memo

- The embroidery can be sewn while the preview image is displayed in the embroidering screen. If the preview image is displayed in any screen other than the embroidering screen, the embroidery cannot be sewn.

7. Hooping the Fabric in the Embroidery Frame

After selecting the pattern to be embroidered, check which embroidery frames can be used to sew the pattern. Select the appropriate frame, and hoop the fabric and stabilizer in the embroidery frame. (Refer to "Attaching Iron-On Stabilizer (Backing) to Fabric" on page 93.) For precautions concerning the fabric, refer to page 36.

Note

- If the fabric is not taut, the pattern may be misaligned or the fabric may pucker. Follow the procedure described below to firmly stretch the fabric in the embroidery frame so that the fabric is not loose. In addition, be sure to work on a level surface when putting the fabric in the embroidery frame.

Hooping the fabric in the embroidery frame

1 **Select an embroidery frame.**
From the sizes of embroidery frames indicated in the screen, select the embroidery frame that you wish to use.

Embroidery frames that can be used appear lighter ( ) embroidery frames that cannot be used appear darker ( ).

Memo

- If the embroidery frame holder is not attached to the machine, the embroidering area will not display the correct frame size. (Refer to page 51.)

■ **Embroidery frame types**
There are four sizes of embroidery frames included with this machine, which are used with the included embroidery frame holder A. For details on the uses for each frame, refer to "Correctly Using the Embroidery Frames" on page 90.

Icon	Name
Embroidering area	
	Extra-large embroidery frame
200 mm (H) × 360 mm (W) (7-7/8 inches (H) × 14 inches (W))	
	Extra-large embroidery frame (optional)
200 mm (H) × 300 mm (W) (7-7/8 inches (H) × 11-3/4 inches (W))	
	Large embroidery frame
130 mm (H) × 180 mm (W) (5-1/8 inches (H) × 7-1/8 inches (W))	
	Medium embroidery frame
100 mm (H) × 100 mm (W) (4 inches (H) × 4 inches (W))	
	Small embroidery frame
40 mm (H) × 60 mm (W) (1-1/2 inches (H) × 2-3/8 inches (W))	

If you use the optional embroidery frames (quilt, border and jumbo) with the included embroidery frame holder B, following icons appear in the screen; . If you use the optional round frame with the optional embroidery frame holder C, following icons appear in the screen; .

CAUTION

- **If embroidery frames other than the four included frames or recommended optional frames are used, the embroidery frame may hit the presser foot and damage the machine, or cause injury to the user. (See "Correctly Using the Embroidery Frames" on page 90 for the details about the embroidery frames.)**

Note

- The embroidery frame indicators show all embroidery frame sizes in which the embroidery pattern can be sewn. Be sure to use an embroidery frame of the most suitable size. If the embroidery frame that is too large is used, the pattern may be misaligned or the fabric may pucker. (Refer to "Correctly Using the Embroidery Frames" on page 90.)

■ **Hooping fabric in the small embroidery frame**

The procedure for hooping fabric in the small embroidery frame is described below.
The same procedure is used to hoop the fabric in the medium embroidery frame.
For details on hooping fabric in the other included embroidery frames, refer to "Hooping the Fabric" on page 94.

2 Loosen the screw on the outer frame.

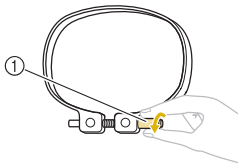

① Screw

3 Place the fabric with the right side up on top of the outer frame.

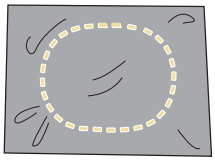

- The outer frame does not have a front or back side. Either side can be used as the front.
- In order to prevent shrinkage of the stitching or misaligned patterns, we recommend that iron-on stabilizer (backing) be used for embroidering. (Refer to "Attaching Iron-On Stabilizer (Backing) to Fabric" on page 93.

4 Press the inner frame into the outer frame.

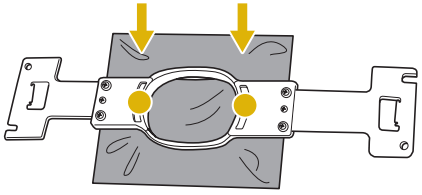

- Be sure that there are no wrinkles in the fabric after it is positioned in the embroidery frame.

5 Lightly tighten the screw, and then pull the edges of the fabric.

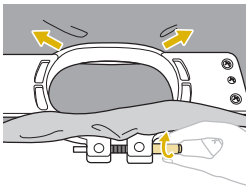

6 Securely tighten the screw, and then check to make sure that the fabric is taut.

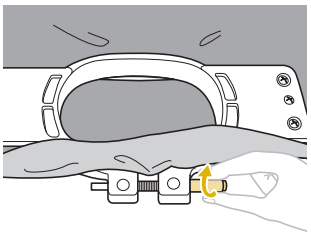

- After securing the fabric, lightly tapping it should produce a drum-like sound.
- Firmly clamp together the inner and outer frames so that the bottom of the inner frame is lower than the bottom of the outer frame.

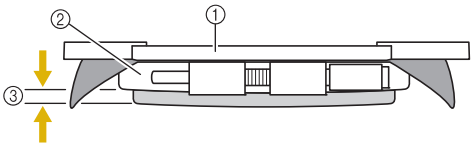

① Inner frame
② Outer frame
③ Bottom of inner frame

- Using the included disc-shaped screwdriver, firmly tighten the screw.

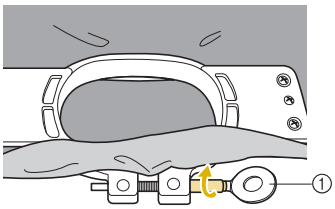

① Disc-shaped screwdriver

The amount that the fabric is stretched and the use of stabilizer material differ depending on the type of fabric being embroidered. Try various methods to achieve the best embroidering results. (Refer to "Hooping techniques" on page 247.)

Memo

- This embroidery machine can also be used with the optional cap frames. (Refer to "Using the Optional Cap Frame" on page 253.)

8. Attaching the Embroidery Frame to the Machine

After hooping the fabric in the embroidery frame, attach the frame to the embroidery machine. Embroidery frame holders A and B are included accessories with this machine.
Install embroidery frame holder A when an included embroidery frame is to be used. (See “Correctly Using the Embroidery Frames” on page 90 for the details about the embroidery frame holders.)

CAUTION

- **If the embroidery frame is not correctly attached it may hit the presser foot and damage the machine, or cause injury to the user.**
- **When attaching the embroidery frame, make sure that the start/stop button is lit in red. If the start/stop button is flashing in green, the embroidery machine may start sewing. If the embroidery machine accidentally starts operating, injuries may result.**
- **When attaching the embroidery frame, make sure that the embroidery frame does not hit any other part of the embroidery machine.**

Note

- Before attaching the embroidery frame, check that there is enough thread in the bobbin.

Attaching the embroidery frame

Adjust the width of the embroidery frame holder to the size of the embroidery frame, and then attach the embroidery frame to the machine. As an example, the procedure for attaching the small embroidery frame is described below.

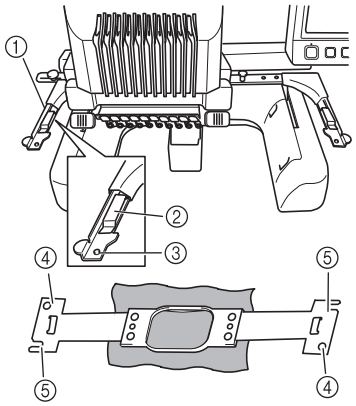

① Left arm of embroidery frame holder
Move the arm of the embroidery frame holder to the left or right to adjust it to the size of the embroidery frame.
② Clip on embroidery frame holder.
Insert the embroidery frame into the clips on the embroidery frame holder.
③ Positioning pin
④ Holes
⑤ Positioning slots

1 **Loosen the two thumb screws on the embroidery frame holder.**
If the screw is too tight, please use the included disc-shaped screwdriver.

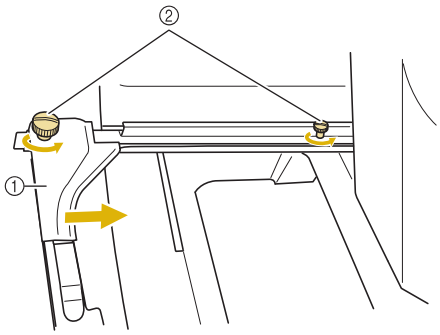

① Left arm
② Thumb screws

▶ The left arm of the embroidery frame holder can be moved.

- Only loosen the thumb screws a maximum of 2 turns counterclockwise. Do not remove the screw.

2 Move the left arm to align the screw on the right side with the mark for the embroidery frame to be installed, and then tighten the thumb screws.

For this example, align with mark ⑤.

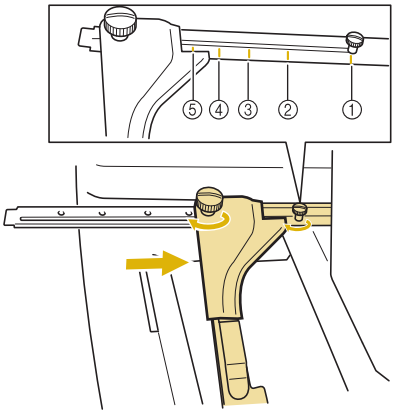

① Mark for extra-large embroidery frame 200 mm (H) × 360 mm (W) (7-7/8 inches (H) × 14 inches (W))
② Mark for extra-large embroidery frame 200 mm (H) × 300 mm (W) (7-7/8 inches (H) × 11-3/4 inches (W)) (optional)
③ Mark for large embroidery frame 130 mm (H) × 180 mm (W) (5-1/8 inches (H) × 7-1/8 inches (W))
④ Mark for medium embroidery frame 100 mm (H) × 100 mm (W) (4 inches (H) × 4 inches (W))
⑤ Mark for small embroidery frame 40 mm (H) × 60 mm (W) (1-1/2 inches (H) × 2-3/8 inches (W))

Note

- Please firmly tighten the two thumb screws with included disc-shaped screwdriver. The machine will recognize the wrong frame size, if the two screws are not tightened.

▶ The embroidery frame holder is ready for the embroidery frame to be attached.

3 Hold the embroidery frame level, and then simultaneously align both the left and right mounts with the embroidery frame holder clips.

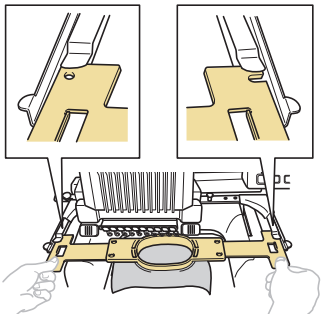

- The inner frame should be on top.

Note

- Attach the embroidery frame to place the needle plate under the embroidering area otherwise the embroidery frame hits the needle plate.

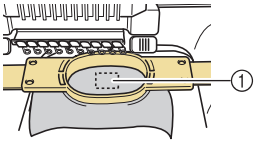

① Needle plate

- If the outer frame is on top, as shown below, the embroidery frame is incorrectly attached.

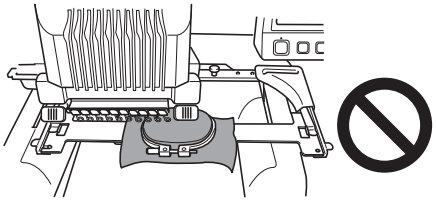

4 Insert the embroidery frame until it snaps into place.

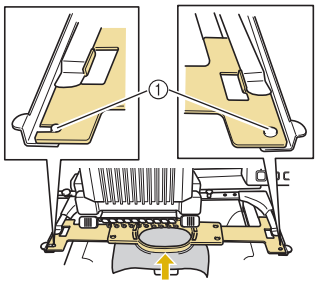

① Make sure that the pins on the left and right arms of the embroidery frame holder fit into the positioning slot and hole on the embroidery frame.

9. Checking the Embroidery Area

Check the embroidery area to make sure that the embroidery will be sewn in the desired location and will not be misaligned and that the embroidery frame will not hit the presser foot.
If the embroidery frame is not correctly positioned, it moves to the correct position, and then the embroidering position is indicated.

Note

- If you are embroidering a large project such as a jacket or curtains, using the flat, quilt or jumbo frame, your embroidering may be interrupted by the presser feet not in use catching on the fabric outside of the design area. Try to stitch the design as close to the center of the embroidery frame, using needle bars 3 through 7, keeping the head of the machine as centered as possible. (Refer to page 108 or 132 to select the needle bar).

1 **Touch** .

▶ The presser foot is lowered and the embroidery frame moves to show the embroidery area.

2 **The corners of the octagon showing the embroidery area for the pattern are indicated by changing direction.**

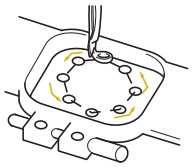

Carefully watch the movement of the embroidery frame and check that the embroidery is sewn in the desired location and that the embroidery frame does not hit the presser foot.

Temporarily stopping to check the area

The embroidery frame can be temporarily stopped at a desired position or the checking of the embroidering area can be stopped.

1 **When the embroidery frame moves to the desired position, touch again.**

▶ The embroidery frame stops moving, and the next screen appears.

① Touch to continue moving the frame.
② Touch to stop checking the embroidering area.

2 **To continue moving the embroidery frame, touch . To stop checking the embroidering area, touch .**

Continuing to the embroidering screen

After finishing the necessary operations in the embroidering settings screen, continue to the embroidering screen.

1 **Touch .**

▶ The embroidering screen appears.

10. Upper Threading

Check the embroidering screen for information on which needle bars should be threaded with which thread colors, and then thread the upper threads.

Checking the needle bars and thread colors

In the embroidering settings screen, touch SEWING to display the embroidering screen. Check the thread colors in this screen.
Change thread spools message will appear if the thread spools from the previous embroidery project need to be changed. If you set “Manual Color Sequence” to “ON” in the settings screen, the message does not appear even if the thread spools need to be changed. (Refer to “Selecting/Managing Thread Colors for Each Needle Bar (Manual Color Sequence)” on page 132.)
Embroidering screen (For details on the keys and other information on the screen, refer to page 79.)

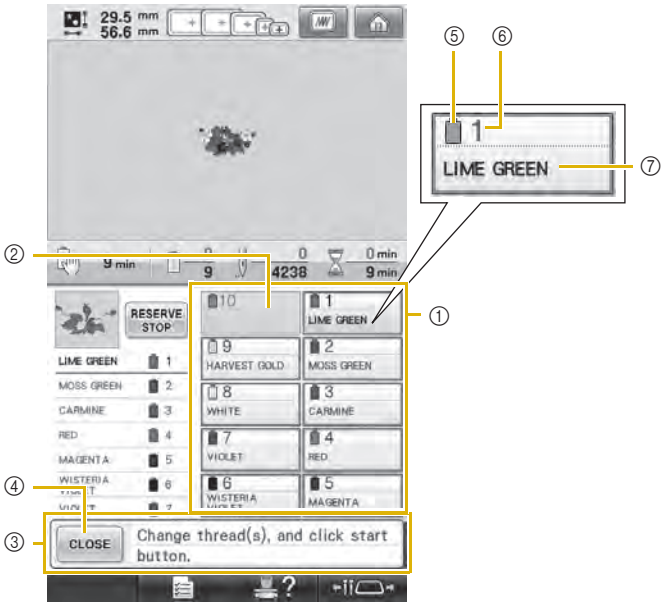

① Thread information for the first to tenth needle bars
② If no thread color name is displayed, that needle bar has not been used.
If a thread color had been assigned to the needle bar on a previously sewn design, the needle bar will show the previously assigned color.
③ Change thread spools message. (Refer to page 113.)
This message appears when it is necessary for the thread spools to be changed. If CLOSE ④ is not touched to close the message, embroidering cannot continue.

Memo

- The thread information for the thread spool to be changed appears framed in red.

⑤ Thread color
⑥ Needle bar number
⑦ Thread color name or number
If the thread color number (#123) is selected in the settings screen (Refer to “Changing the thread color information” on page 220), the thread brand will also displayed.

Thread with the color name that appears beside each needle bar number is threaded on that needle bar. For the screen shown

1: LIME GREEN	6: WISTERIA VIOLET
2: MOSS GREEN	7: VIOLET
3: CARMINE	8: WHITE
4: RED	9: HARVEST GOLD
5: MAGENTA	

If there is no name beside the needle bar number, that needle bar is not used. For this example, needle bar 10 is not used.

1 **Touch** CLOSE .

▶ The screen indicating that the spools be changed is closed.

- In addition to checking the thread colors, information such as the number of stitches and the sewing time can be checked and various embroidering settings can be specified in the embroidering screen.

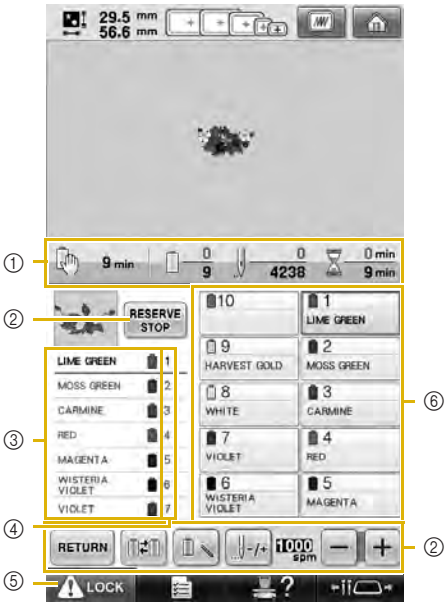

① Shows the number of thread color changes, the number of stitches, the embroidering time and the length of time until the machine will stop.
② Use these keys to specify various embroidering settings or to return to the embroidering settings screen.
③ Shows the embroidering order for the thread colors.
④ Indicates the needle bar number where the thread color at the left is assigned.
⑤ To start the machine, touch this key to unlock the machine, and then press the start/stop button.
⑥ Touch a key to move the selected needle bar to the sewing position. Use when threading the needle with the automatic needle-threading mechanism.

Note

- Available keys are not the same if you set "Manual Color Sequence" to "ON" in the settings screen. (Refer to page 79 for details on the keys and other information on the screen.)

CAUTION

- **When** LOCK **(unlock key) in the embroidering screen is touched, the start/stop button begins flashing in green and the embroidery machine can start sewing. If the upper threading is being performed or the needle is being threaded, be careful that the embroidery machine is not accidentally started, otherwise injuries may result.**

Upper threading

Use machine embroidery thread to thread the needle bars in order, starting with needle bar 1.

Touch → Basic Operation → → in order to view a video of the operation on the LCD (refer to page 230).

CAUTION

- **When threading the upper thread, carefully follow the instructions. If the upper threading is not performing correctly, the thread may break or become tangled, causing the needle to bend or break.**

Note

- It is recommended that rayon or polyester machine embroidery thread be used (120 den/2, 135 dtex/2, 40 weight (in Americas and Europe), #50 (in Japan)).

Memo

- The path that the embroidery machine should be threaded is indicated by a line on the machine. Be sure to thread the machine as indicated.

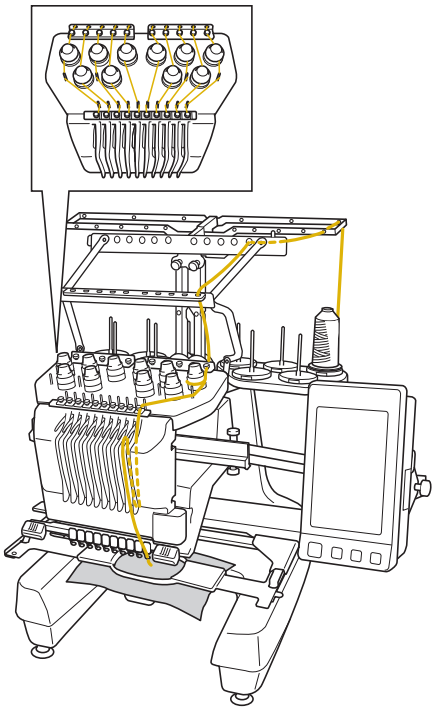

1 On the spool pin, place a spool with the thread color specified for the corresponding needle bar.

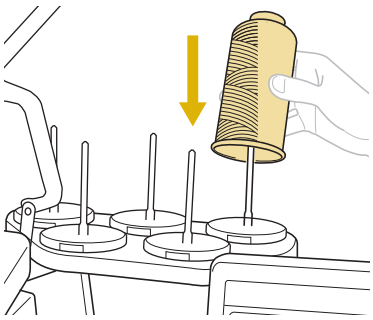

- Check that the spool stand has been completely opened.
- When using small spools of thread, be sure to place the included spool mat on the spool pin before placing the spool on the pin.
- Place the thread in the center of the spool stand so that the thread feeds off of the spool correctly and does not get tangled around the spool pin directly under the thread spool.

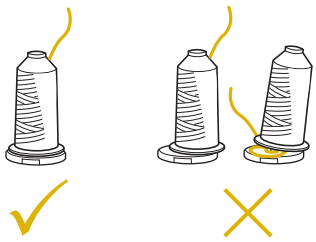

- Use spool cap on all spools of thread shorter than the height of the spool pin.

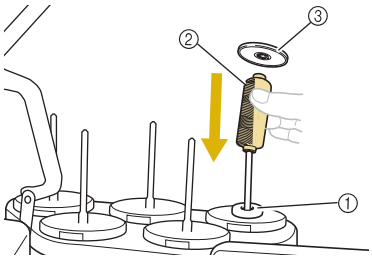

① Spool mat
② Small spool
③ Spool cap

The numbers indicate the thread path for each of the numbered needle bars. Be very careful to correctly thread the needle bars.

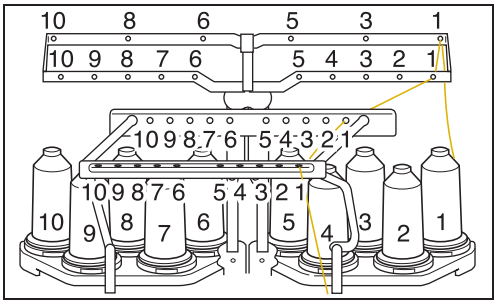

2 **Pass the thread of a specified color through the holes on the thread guide, making sure that you have the thread color matched to the coordinating needle bar.**
Pass the thread from spool pins 1, 3, 5, 6, 8 and 10 through the holes in both thread guides A and B.
Pass the thread from spool pins 2, 4, 7 and 9 through the hole in thread guide B only.

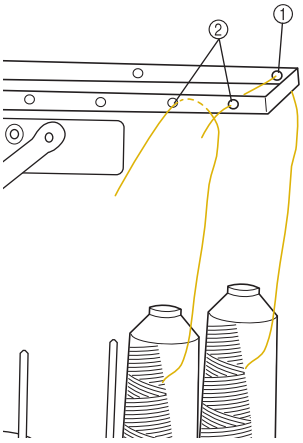

① Thread guide A (There are 6 holes in this thread guide)
② Thread guide B (There are 10 holes in this thread guide)

3 **Pass the thread through the hole (with the corresponding needle bar number) in thread guide C, then through the corresponding hole in thread guide D.**
As an example, the threading for spool pin 1 is shown.

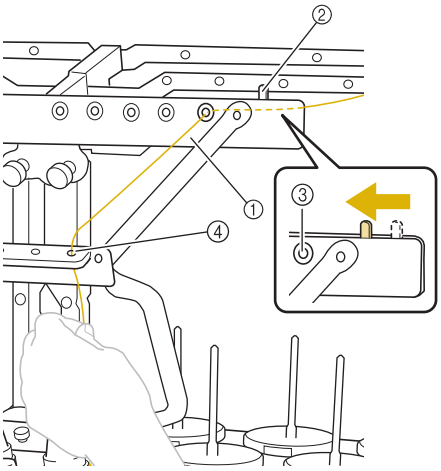

① Thread guide C
② Thread tension lever
③ Holes in thread guide C
④ Thread guide D

Note

- Before threading, make sure to slide the thread tension lever to the left so that the holes in thread guide C are fully open.
- After all upper threading is finished, be sure to slide the thread tension lever back to the right. Embroidering with the holes in thread guide C fully open may cause the thread to become tangled or break.

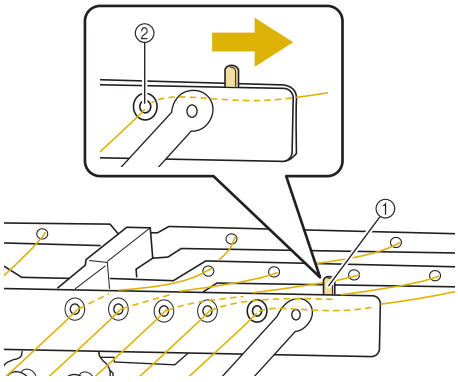

① Thread tension lever
② Holes in thread guide C

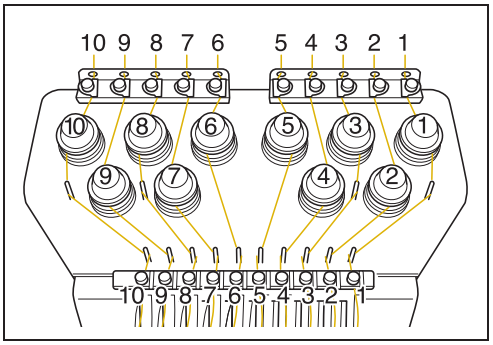

4 **Pass the thread through the hole in the number 1 upper thread guide and pull the thread toward you.**

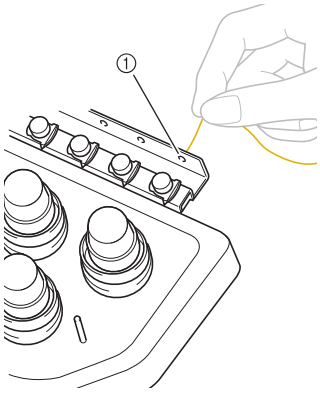

① Hole in upper thread guide

5 **Hold the thread with both hands, and then pass it under the guide plate from the right.**

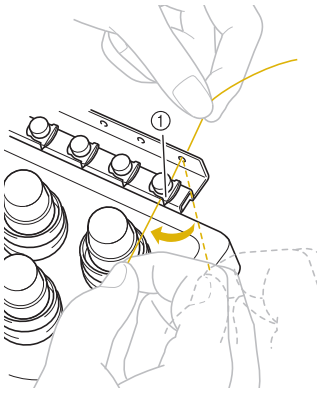

① Upper thread guide plate

6 **Wind the thread clockwise once around the number 1 thread tension disc.**

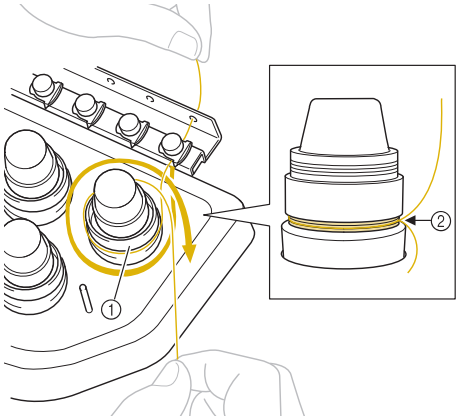

① Thread tension disc
② Pass thread in a clockwise direction at this location on the tension disks.

- Make sure that the thread is securely positioned in the thread tension.

Note

- All thread tension discs are threaded in clockwise direction.

7 **Lead the thread along the thread path and around the correct thread guide pins as indicated on the machine, then slip the thread under the number 1 middle thread guide plate from the right.**

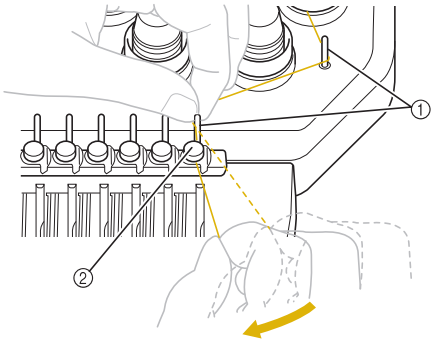

① Thread guide pin
② Middle thread guide

- The path from the upper thread guide around the thread tension disc and to the middle thread guide (steps 6 through 7) may differs depending on the spool number. Passing the thread through the thread guide pins is designed to prevent the thread from becoming tangled. Be sure to follow the thread path indicated on the machine.

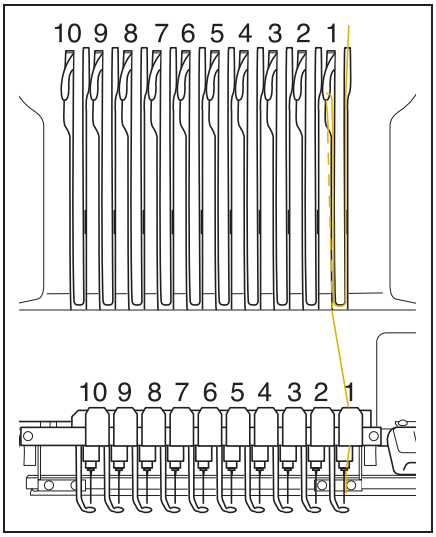

8 **Pass the thread along the number 1 slot to pass it through the number 1 take-up lever hole from right to left.**

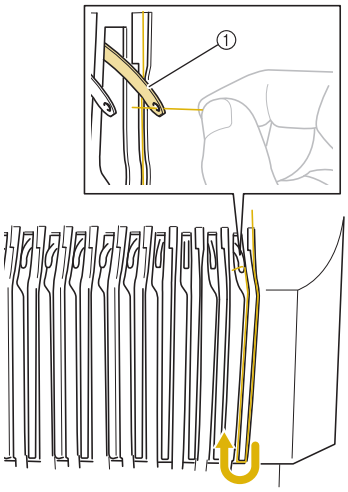

① Thread take-up lever

9 **Pass the thread down through the slot to the lower thread guide, and then through the hole in the number 1 lower thread guide.**

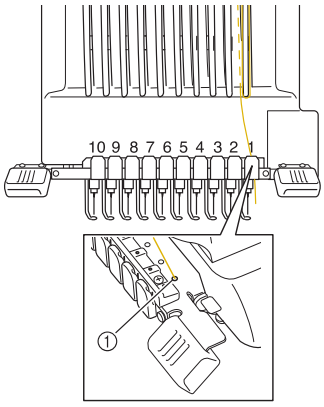

① Hole in lower thread guide

10 **Use the included threader to pass the thread into the number 1 needle bar thread guide.**

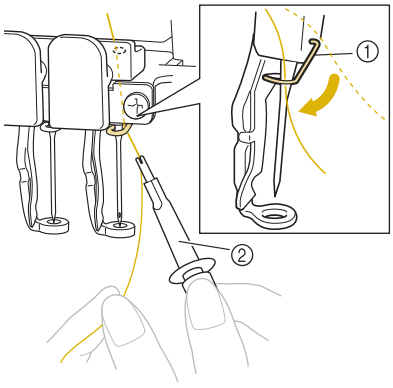

① Needle bar thread guide
② Needle changing tool (Threader)

11 **When all upper threading is complete, be sure to slide the thread tension lever for thread guide C to the right, closing the holes in the thread guide.**

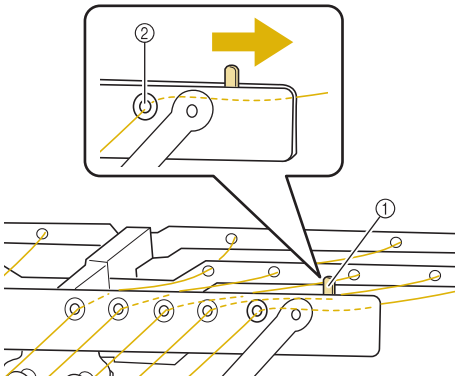

① Thread tension lever
② Holes in thread guide C

Threading the needle

Use the automatic needle-threading mechanism to thread the needle.

Touch → Basic Operation → → in order to view a video of the operation on the LCD (refer to page 230).

1 Press the automatic needle-threading button.

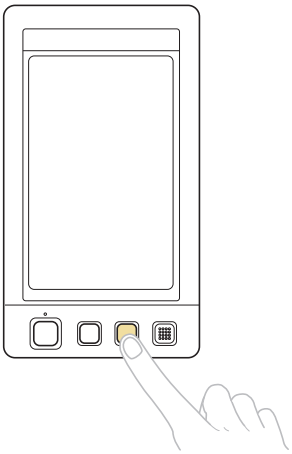

▶ The hook on the automatic needle-threading mechanism passes through the eye of the needle.

CAUTION

- **If the needle is not fully inserted, the hook of the automatic needle-threading mechanism will not pass through the eye of the needle during automatic needle threading, and the hook may bend or the needle cannot be threaded.**
- **If the hook of the automatic needle-threading mechanism is bent or damaged, contact your authorized retailer.**
- **While the hook of the automatic needle-threading mechanism is passed through the eye of the needle, do not rotate the handwheel, otherwise the automatic needle-threading mechanism may be damaged.**

Note

- To avoid damage, the automatic needle-threading mechanism may return to the back position when you turn the handwheel.
- The automatic needle-threading mechanism can thread one needle at the sewing position. When this mechanism is used, be sure that the needle bar that you want to thread is positioned as the sewing position, otherwise the automatic needle-threading mechanism cannot be used at the particular needle. If the needle bar is not at the sewing position, move it there. (Refer to page 62.)

2 Pull out about 150 mm (6 inches) of thread. Allow thread to relax and eliminate any stress on the thread. Then, as shown in the illustration, pass the thread under the fork of the automatic needle-threading mechanism from the right, and then catch the thread with the hook that passes through the eye of the needle.

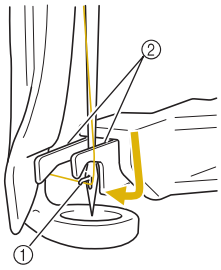

① Hook
② Fork

Note

- When catching the thread with the hook, be careful that the thread does not become loose.

3 **Pass the thread under the guide on the presser foot.**

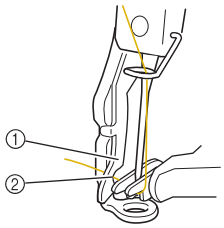

① Guide on presser foot
② Notch in guide on presser foot

- Make sure that the thread securely passes through the notch in the guide on the presser foot.

4 **Securely pass the thread through the groove in the thread cutter, and then lightly pull the thread to cut it.**

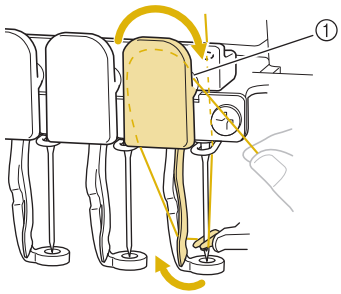

① Groove in thread cutter

Note

- If the thread is not correctly passed through the groove in the thread cutter, the message “Wiper error” appears and the needle cannot be threaded. Be sure to securely pass the thread through the groove.
- If enough thread is not pulled out, the thread cannot be pulled through the thread cutter.

5 **Press the automatic needle-threading button.**

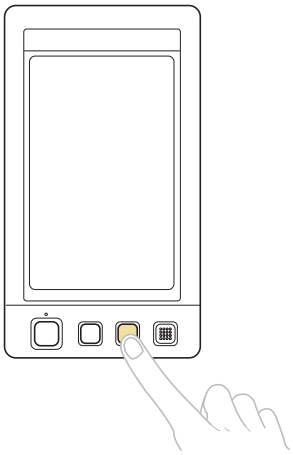

- The threader moves back away from the needle. The thread is pulled through the needle eye.
- The wiper comes out and catches the thread between the needle and the threader.
- The threader goes back to the original home position.

This completes the upper threading for needle bar 1.

Thread the remaining needle bars in the same way.

Note

- If the needle bar to be threaded is not moved to the embroidering position, the needle cannot be threaded with the automatic needle-threading mechanism. For the remaining needle bars, perform the following operation to move the needle bar to the embroidering position before trying to thread the needle.

■ **Moving and threading a selected needle bar**
You can move and thread a selected needle bar to the embroidering position at any time.

1 **Touch** .

▶ The needle bar move screen appears.

2 **Touch the key for the needle bar that you wish to move or thread.**

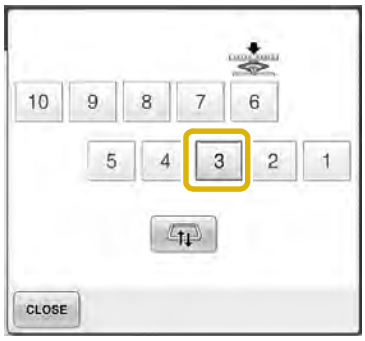

▶ The selected needle bar moves to the position of embroidery.

3 **Press the automatic needle-threading button while the needle bar move screen appears.**

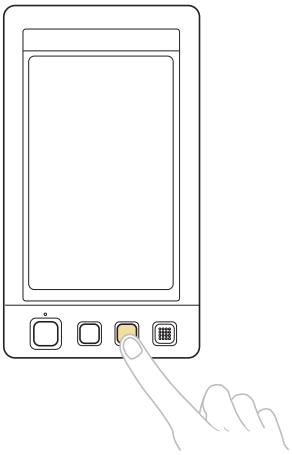

4 **Touch** CLOSE **to return to the previous screen.**

Memo

- In the embroidering screen, a blue frame appears around the thread information box of the selected needle bar.

■ **Moving the needle bar to be threaded to the position of embroidery**

You can move the needle bar in the embroidering screen.

1 Touch the key for the needle bar that you wish to thread.

▶ The selected needle bar moves to the embroidering position.

Note

- If the thread is not taut, it may come out of the thread tension disc. After upper threading is finished, check again to make sure that the thread is correctly passed into the thread tension disc. (Refer to step 6 on page 58.)

Memo

- When changing one of the upper thread colors, it is easy to re-thread by cutting the thread currently being used between the spool and the thread guide above the spool. Place the new spool on the spool pin and tie the end of the new thread to the end of the previous thread. Then pull the thread through to the needle. (Refer to page 114.)

■ **Using the spool net**

When using metallic thread or any other strong thread, place the included spool net over the spool before sewing.

If the spool net is too long, fold it once to match the size of the spool before placing it over the spool.

It may be necessary to adjust thread tension when using the spool net.

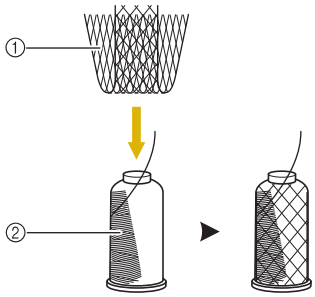

① Spool net
② Thread

2

11. Sewing the Embroidery

Now, the embroidery machine is ready to begin sewing.
When the machine starts sewing, the presser foot is automatically lowered, the necessary thread trimming operations at the end of stitching are performed, the threads are changed as necessary while the embroidery is sewn, and the machine stops when the end of the stitching is reached.

CAUTION

- **For safety reasons, the embroidery machine must not be left unattended while it is sewing.**
- **While the machine is in operation, pay special attention to the needle location. In addition, keep your hands away from all moving parts such as the needle, needle bar case, thread take-up lever and carriage, otherwise injuries may result.**

■ **Locking mechanism**

For safety reasons, this embroidery machine is equipped with a locking function.
Normally, the embroidery machine is locked (it cannot start sewing). Unless the machine is unlocked, it cannot start sewing. If the embroidery machine is not started within 10 seconds after unlocking it, it automatically returns to being locked.
The start/stop button shows whether or not the embroidery machine is locked. If the start/stop button lights up in red, the machine is locked. If the start/stop button flashes in green, the machine is unlocked.

Starting embroidering

Note

- Make sure that there are no objects within the moving area of the embroidery frame. If the embroidery frame hits another object, the pattern may become misaligned.

1 **Touch LOCK to unlock the embroidery machine.**

▶ The start/stop button begins flashing in green and the embroidery machine can be started.

- If the start/stop button is not pressed within 10 seconds after unlocking the embroidery machine, the machine becomes locked again.

2 Press the start/stop button.
Press the start/stop button while it is flashing in green. If the start/stop button returns to being lit in red, perform this procedure again from step 1.

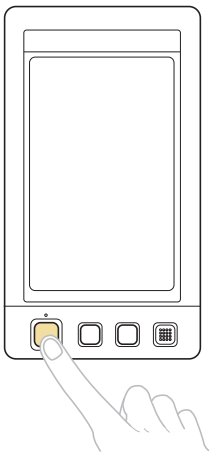

▶ The start/stop button lights up in green and begins sewing the first color.

① The thread color for the needle bar that is currently being used for sewing or will soon be used for sewing appears at the top of the thread color sequence display. The remaining thread colors are listed in the sewing order, starting from the top.
② A blue frame appears around the thread information box of the needle bar currently being selected.

- While the embroidery machine is sewing, the point being sewn is indicated by the green crosshairs in the pattern display area. In addition, the number of stitches and the time count up.

3 After sewing of the first color is finished, the machine automatically stops and trims the thread. The needle bar case moves to the 2nd color position and sewing of the second color begins.

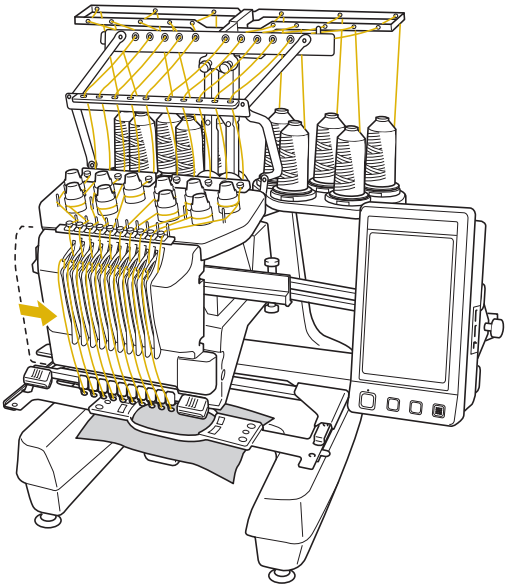

▶ The thread color display in the screen continues to the second color, and the thread information for the second needle bar is surrounded by the blue frame.

4 This continues until the last color is sewn, and the embroidery machine automatically stops.

▶ The embroidering settings screen reappears.

▶ The start/stop button lights up in red.

- No thread trimming operations at the beginning of stitching and at the end of stitching are necessary.

■ **Continuing embroidering**

To sew the same pattern again, touch SEWING.

▶ The embroidering screen appears so the same pattern can be sewn again.

To select a new pattern, touch .

▶ The pattern type selection screen appears.

Note

- Automatic Lock stitching can be set so that it is sewn at the beginning of the embroidery, when starting to sew after changing thread colors, and when trimming the thread. (Refer to “Automatic Lock Stitch Setting” on page 134.)
- The sewing speed can be changed, even while the pattern is being sewn. (Refer to “Maximum Sewing Speed Setting” on page 139.)

Stopping embroidering

The machine can be stopped during sewing.

■ **Temporarily pausing**

1 **Press the start/stop button.**

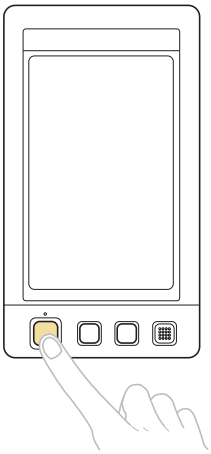

▶ The machine stops and the start/stop button lights up in red.

- The thread is not trimmed.
- To continue sewing, after checking that the upper thread is taut, touch the unlock key, and then press the start/stop button.

Memo

- If the Reserve Stop key is touched while embroidery is being sewn, the machine stops sewing before the next color begins. (Refer to “Stopping the machine at the next color change” on page 140.)
- Before starting to sew, the machine can be set to stop at any thread color change. (Refer to “Specifying pause locations before embroidering” on page 140.)

■ **Resume sewing after the machine was turned off**

1 Press the start/stop button.

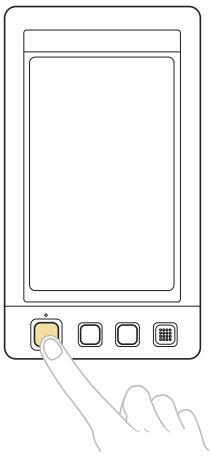

▶ The embroidery machine stops and the start/stop button lights up in red.

- The thread is not trimmed.

2 Touch LOCK to unlock the embroidery machine.

3 Press the thread trimming button.

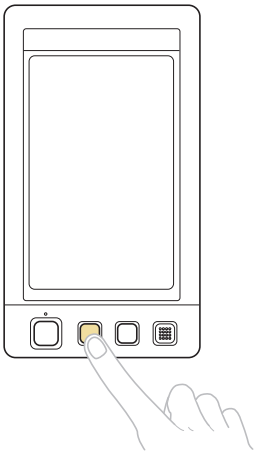

▶ The bobbin and upper threads are trimmed.

- Before turning off the embroidery machine, be sure to trim the threads.

4 Set the main power switch to "○".

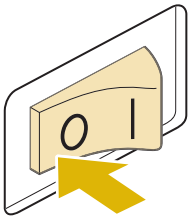

▶ The embroidery machine is turned off and the display and the start/stop button indicator go off.

- Sewing can resume after the embroidery machine is turned on again. Back up several stitches to overlap the stitching. (Refer to "Resume Embroidering After Turning Off the Machine" on page 120 for details.)

Memo

- The machine can be stopped at any time, even while it is embroidering; however, if the machine is stopped when the thread color is changed, it is not necessary to go back through the stitching when embroidering is continued. The machine can be set to stop when the thread color is changed. (For details, refer to "Specifying pause locations before embroidering" on page 140.)

■ **If the thread breaks while sewing**

If a problem occurs while sewing, such as if the thread breaks, the machine stops automatically. Re-thread the broken thread, back up several stitches, and then continue sewing. (Refer to "If the Thread Breaks or the Bobbin Thread Runs Out While Embroidering" on page 115 for details.)

12. Checking the Thread Tension

Check the embroidery to see if it was sewn with the correct thread tension. If the thread tension is not adjusted correctly, the stitching may be uneven or there may be puckering in the fabric.

■ Correct thread tension

From the wrong side of the fabric, the bobbin thread should be about one third of the stitch width.

① ②

① Right side
② Wrong side

If the embroidery appears as shown below, the thread tension is incorrect. Correct the thread tension.

① ②

① Right side
② Wrong side

The tension of the upper thread is too tight, resulting in the lower thread being visible from the right side of the fabric.

Loosen the tension dial by turning the dial counterclockwise.

① ②

① Right side
② Wrong side

The tension of the upper thread is too loose, resulting in a loose upper thread, loose thread locks or loops appearing on the right side of the fabric.

Tighten the tension dial by turning the dial clockwise.

(Refer to “Adjusting the Thread Tension” on page 122 for details on adjusting the thread tension.)

Note

- In this tutorial, the thread tension was checked after embroidering was finished. However, normally, embroidering should be temporarily paused and the thread tension should be checked after the first 100 stitches of each color sewn with each needle bar.
- The resulting embroidery may not appear as expected, due to the type or thickness of the fabric being sewn or to the type of stabilizer material used. Be sure to sew a trial embroidery before sewing on your project.

Memo

- In the built-in embroidery patterns, one pattern is used for checking the thread tension. For details, refer to “Checking the thread tension of built-in patterns” on page 241.

13. Removing the Embroidery Frame and Fabric

After sewing is finished, remove the embroidery frame, and then remove the fabric from the frame.

Removing the embroidery frame

CAUTION

- **When removing the embroidery frame, make sure that the start/stop button is lit in red. If the start/stop button is flashing in green, the machine may start sewing. If the machine accidentally starts operating, injuries may result.**
- **When removing the embroidery frame, be careful that the embroidery frame does not hit any other part of the machine.**
- **Do not lift up the embroidery frame holder with extreme force, otherwise it may be damaged.**

1. **With both hands, grab the left and right sides of the arms of the embroidery frame holder, and then slightly lift up the frame.**
   The pins on the arms of the embroidery frame holder should come out of the holes in the sides of embroidery frame.

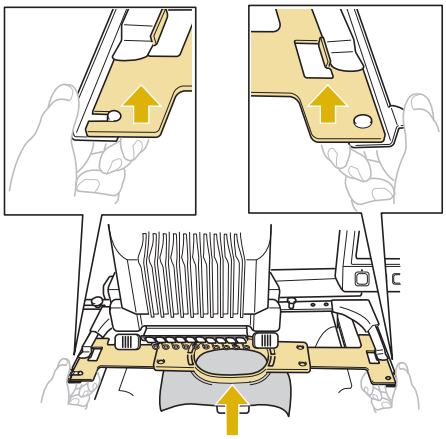

2. **Pull off the embroidery frame toward you.**

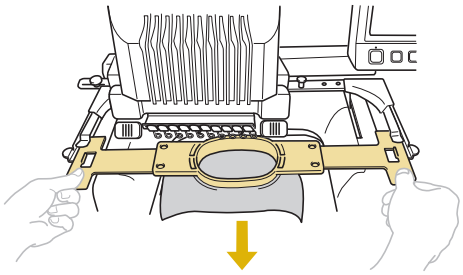

Removing the fabric

1. **Loosen the outer frame screw.**

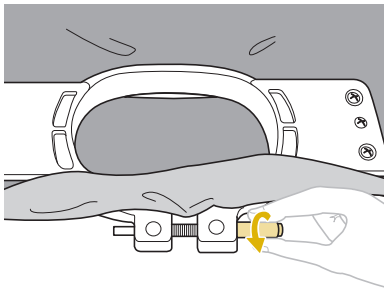

▶ If the screw was tightened using a disc-shaped screwdriver, use the included disc-shaped screwdriver to loosen it.

2. **Remove the outer frame, and then remove the fabric.**

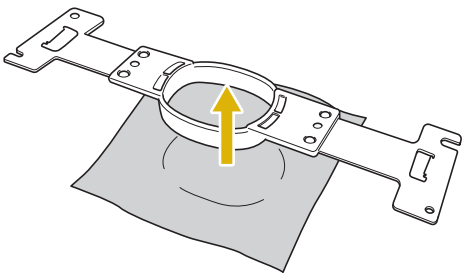

14. Turning OFF the Machine

After all embroidery is finished, turn off the machine.

1 Set the main power switch to "○".

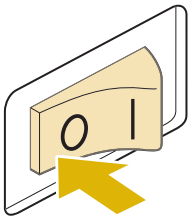

▶ The embroidery machine is turned off and the display and the start/stop button indicator goes off.

2 Unplug the power supply cord from the electrical outlet.
Grasp the plug when unplugging the power supply cord.

3 If necessary, unplug the power supply cord from the machine.
Store the power supply cord in a safe place.

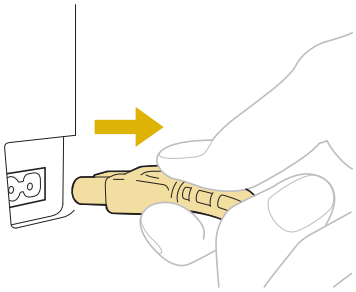

Note

- If a power outage occurs while the embroidery machine is being operated, turn off the embroidery machine and unplug the power supply cord. When restarting the embroidery machine, follow the necessary procedure to correctly operate the machine. (Refer to "Turning ON the Machine" on page 40.)

Memo

- If the machine is turned off while it is sewing, embroidering can continue when the machine is turned on again. (Refer to "Resume Embroidering After Turning Off the Machine" on page 120.)

Turned off while embroidering

↓

Turned on

↓

After the opening movie

↓

Screen Quick Reference Guide

Descriptions of the keys and other information that appear in the screens are provided in the tables below.

Key displays

The appearances of the keys have the following meanings.

(Normal color display) : This key is not selected, but can be selected.

(Dark-colored display) : This key is selected.

(Gray display) : This key cannot be selected.

Common screen controls

The keys described below, except for the settings key, appear in all screens and can always be used. However, the settings key cannot be used in the embroidering screen.

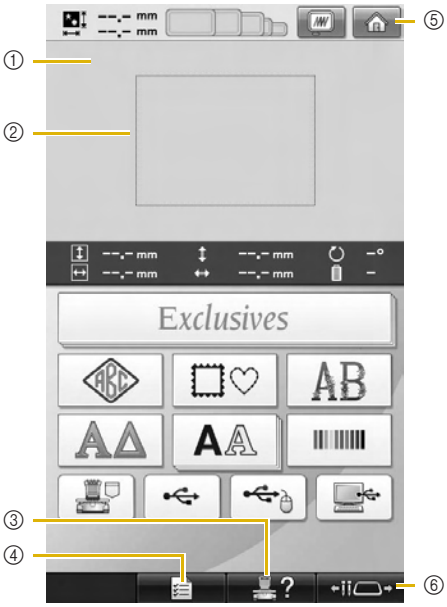

No.	Display Key Name	Function	Page
①	Pattern display area	This area displays the selected pattern.	

No.	Display Key Name	Function	Page
②	Embroidering area line	Shows the available embroidering area. The embroidery frame indications, the grid lines and other display settings can be specified from the machine settings screen.	p.218
③	Machine operations guide key	Touch this key to check a machine operation.	p.230
④	Settings key	Touch this key to change the embroidery machine settings.	p.216
⑤	Home key	Touch this key to cancel all operations previously performed and return to the initial pattern group selection screen.	
⑥	Needle bar/ Frame move key	Touch this key to move or thread a selected needle bar, or to position the carriage so the embroidery frame can easily be removed or attached.	p.30, 62, 90

Understanding the pattern type selection screen

In this screen, select a pattern category (type).

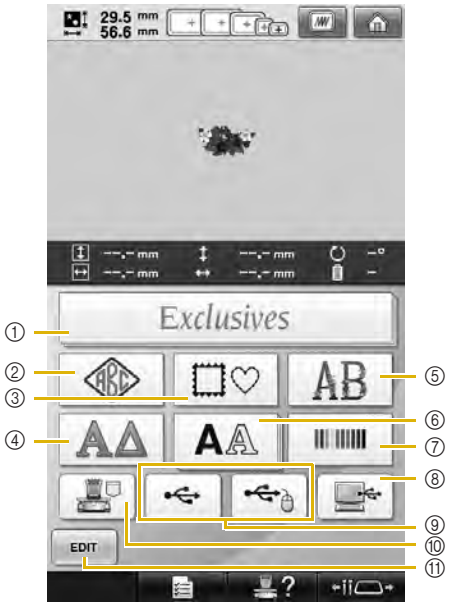

No.	Display / Key Name		Function	Page
①	Exclusives Embroidery pattern key	Built-in patterns	The embroidery pattern for a design to be selected.	p.154
②	Monogram and frame key	Built-in patterns	Monogram designs can be created by combining two or three letters.	p.155
③	Frame pattern key	Built-in patterns	12 stitch types can be combined with 10 frame shapes, such as a circle and a square.	p.154
④	Greek alphabet key	Built-in patterns	Greek uppercase letters.	p.163
⑤	Floral alphabet key	Built-in patterns	Alphabet patterns designed with flowers decorating large uppercase letters (130 mm (H) × 80 mm (W)).	p.162
⑥	Alphabet key	Built-in patterns	Uppercase and lowercase letters, numbers, symbols and accented characters from 28 fonts can be selected in small, medium and large sizes.	p.159
⑦	Common designs key	Built-in patterns	Patterns to learn how to use this machine, which appear in this operation manual.	p.45, p.241
⑧	Computer (USB) key		By using the included USB cable to connect a computer to the embroidery machine, patterns can be recalled from the computer.	p.166
⑨	USB media keys		Recall patterns from USB media.	p.172
⑩	Embroidery patterns stored in the machine memory key		Recalls patterns stored in the machine's memory.	p.163
⑪	EDIT Edit key		This key is not displayed unless a pattern is selected. Touch this key to quit trying to add another pattern from the pattern type selection screen. Return to the pattern editing screen.	p.179

Understanding the pattern list screen

In this screen, select the pattern.

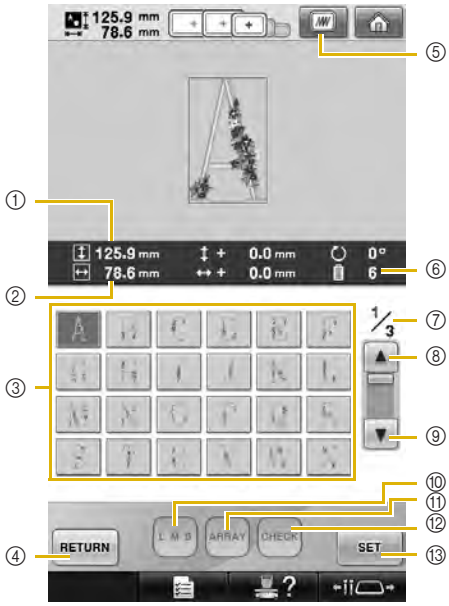

No.	Display / Key Name	Function	Page
①	125.9 mm Size (vertical)	Shows the vertical length of the currently selected embroidery pattern.	
②	78.6 mm Size (horizontal)	Shows the horizontal width of the currently selected embroidery pattern.	
③	A Pattern keys	An image of the pattern appears on the key. Touch the image to select the pattern.	p.153
④	RETURN Return key	Touch to leave the currently selected pattern category and choose a different category. Returns to the pattern type selection screen.	p.153
⑤	W Preview key	Displays an image of the pattern that is to be embroidered so it can be previewed.	p.48
⑥	6 Number of thread colors	Shows the number of thread colors for the currently selected embroidery pattern.	

No.	Display / Key Name	Function	Page
⑦	1/3 Page	Shows the number of the currently displayed page and the total number of pages.	
⑧	▲ Previous page key	Touch this key to display the previous page.	p.153
⑨	▼ Next page key	Touch this key to display the next page.	p.153
⑩	L M S Size key	Allows the size of the currently selected embroidery pattern to be changed.	p.160
⑪	ARRAY Array key	Touch this key to change the configuration of a character pattern.	p.162
⑫	CHECK Check key	Touch this key to check the entered text for a character pattern.	p.161
⑬	SET Set key	Touch after selecting the pattern. The selection of the pattern is confirmed and the pattern editing screen appears.	p.153

* Some patterns cannot be edited with ⑩ or ⑪.

Understanding the pattern editing screen

In this screen, the pattern can be edited.

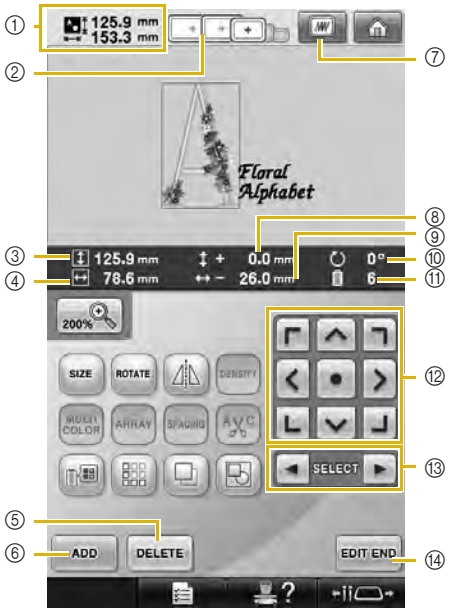

No.	Display / Key Name	Function	Page
①	125.9 mm 153.3 mm Pattern size	Shows the size of the embroidery pattern currently displayed in the pattern display area. The top value shows the height and the bottom value shows the width. If the embroidery pattern consists of multiple patterns that have been combined, the size of the entire pattern, including all patterns, is shown.	
②	Embroidery frame indicators	Shows the sizes of embroidery frames that can be used to sew the embroidery pattern currently displayed in the pattern display area.	p.49
③	125.9 mm Size (vertical)	Shows the vertical length of the pattern that is being edited.	
④	78.6 mm Size (horizontal)	Shows the horizontal width of the pattern that is being edited.	
⑤	DELETE Delete key	Deletes the pattern. If touched, the pattern being edited is deleted.	p.202
⑥	ADD Add key	Adds a pattern. If touched, the pattern group selection screen appears.	p.179
⑦	Preview key	Displays an image of the pattern so that it can be previewed.	p.48
⑧	0.0 mm Distance from center (vertical)	Shows the vertical distance that the pattern being edited is moved.	p.181
⑨	26.0 mm Distance from center (horizontal)	Shows the horizontal distance that the pattern being edited is moved.	p.181
⑩	0° Rotation angle	Shows the rotation angle that the pattern being edited is rotated.	p.183
⑪	6 Number of thread colors	Shows the total number of thread colors for the pattern that is being edited.	
⑫	Positioning keys	Moves the sewing position of the pattern that is being edited in the direction of the arrow. (If ● is touched, the sewing position is moved to the center of the embroidering area.)	p.181
⑬	SELECT Pattern selection keys	Selects the pattern that is being edited when the embroidery pattern consists of multiple patterns that have been combined.	p.181
⑭	EDIT END Edit End key	Finish editing and continue to the embroidering settings screen.	p.46

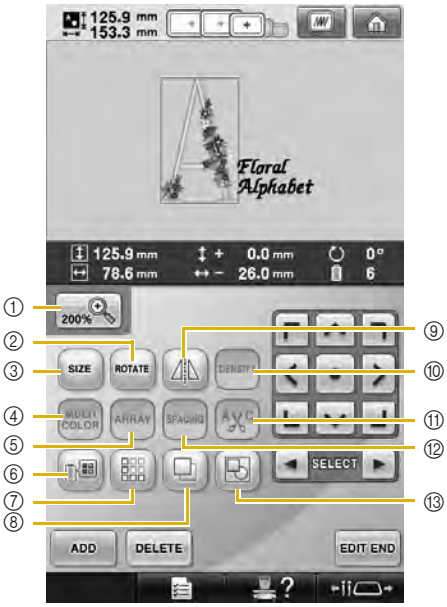

No.	Display / Key Name	Function	Page
①	Enlarge key	Touch to enlarge the image of editing pattern twice the size.	p.179
②	Rotate key	Rotates the pattern that is being edited.	p.183
③	Size key	Changes the size of the pattern that is being edited.	p.182
④	Multi Color key	Enables the thread color of each character in an alphabet pattern to be changed; can only be used when an alphabet is selected.	p.188
⑤	Array key	Changes the orientation of the characters in the alphabet pattern that is being edited.	p.184
⑥	Change thread color key	Changes the color of the pattern.	p.188
⑦	Border key	Makes and edits a repeating pattern.	p.190
⑧	Duplicate key	Duplicates the pattern.	p.201

No.	Display / Key Name	Function	Page
⑨	Horizontal mirror image key	Flips the pattern being edited horizontally.	p.182
⑩	Density key	Changes the density of the pattern that is being edited; can only be used if an alphabet or frame pattern is selected.	p.187
⑪	Thread trim setting key	Automatically trim any excess thread jumps within the letters of alphabet pattern.	p.187
⑫	Spacing key	Changes the spacing between the characters in the alphabet pattern that is being edited.	p.185
⑬	Grouping key	Touch to edit all the separated patterns as a group.	p.202

Understanding the embroidering settings screen

From this screen, the entire pattern can be edited and embroidering settings can be specified. In addition, the embroidering position can be checked and a pattern can be saved for later use. Keys available in this screen differ when you set “Manual Color Sequence” to “ON” in settings screen. (Refer to page 78 and 132.)

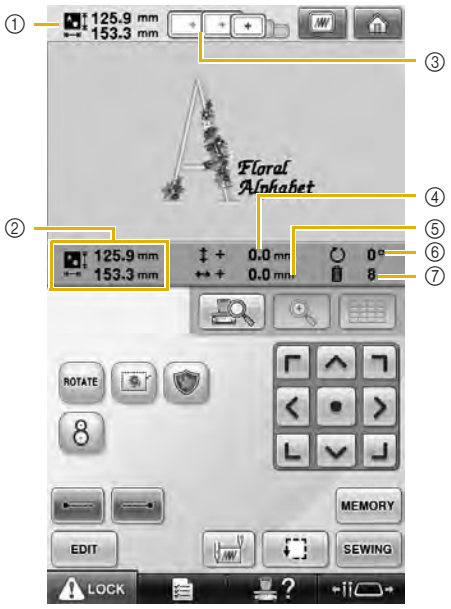

No.	Display / Key Name	Function	Page
①	125.9 mm 153.3 mm / Pattern size	Shows the size of the embroidery pattern currently displayed in the pattern display area. The top value shows the height and the bottom value shows the width. If the embroidery pattern consists of multiple patterns that have been combined, the size of the entire pattern, including all patterns, is shown.	
②	125.9 mm 153.3 mm / Combined/ edited pattern size	Shows the overall size (vertical ↕ and horizontal ↔) of the entire combined pattern.	p.181
③	/ Embroidery frame indicators	Shows the sizes of embroidery frames that can be used to sew the embroidery pattern currently displayed in the pattern display area.	p.49
④	0.0 mm / Distance from center (vertical)	Shows the vertical distance that the pattern being combined/edited is moved.	p.99
⑤	0.0 mm / Distance from center (horizontal)	Shows the horizontal distance that the pattern being combined/edited is moved.	p.99
⑥	0° / Rotation angle	Shows the rotation angle that the pattern being edited is rotated.	p.100, 203
⑦	8 / Number of thread colors changes	Shows the total number of thread colors for the pattern that is being edited.	

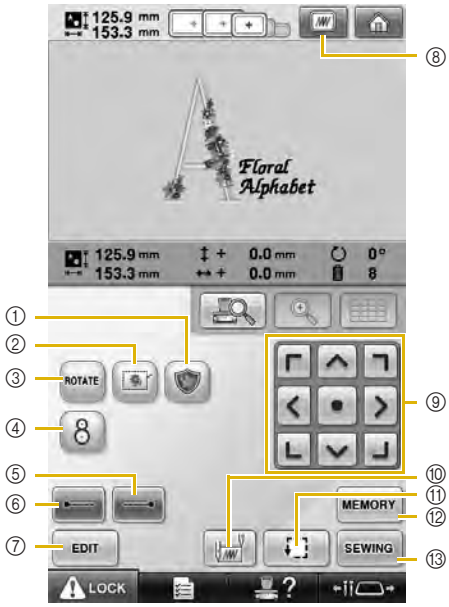

No.	Display / Key Name	Function	Page
①	Embroidery appliqué key	Makes an appliqué piece from a desired pattern. The outline for the appliqué piece is sewn around the pattern.	p.127
②	Embroidery basting key	When stabilizer material is not affixed to the fabric, sew basting stitches along the outline of the pattern to minimize shrinkage of the stitching and misaligned patterns.	p.126
③	Rotate key	Rotates the entire embroidery pattern when it consists of multiple patterns that have been combined.	p.100, 203
④	Positioning key	Touch to align the embroidering position using the machine's built-in camera.	p.105
⑤	Lock stitching (end) key	Specifies that automatic lock stitch is sewn when the thread is trimmed.	p.134
⑥	Lock stitching (beginning) key	Specifies that automatic lock stitch is sewn at the beginning of the pattern and at the beginning of sewing after thread trimming.	p.134
⑦	Edit key	Touch to return to the pattern editing screen.	
⑧	Preview key	Displays an image of the pattern that is to be embroidered so it can be previewed.	p.48
⑨	Positioning keys	Moves the sewing position of the whole pattern in the direction of the arrow. (If is touched, the sewing position is moved to the center of the embroidering area.)	p.99
⑩	Starting/ ending position key	Specifies the needle position at the beginning of sewing and at the end.	p.135
⑪	Trial sewing key	Moves the embroidery frame so that the embroidering position can be checked.	p.53
⑫	Memory key	Save a pattern in the machine's memory, USB media or a computer.	p.209
⑬	Sewing key	Finish all operations in the embroidering settings screen and continues to the embroidering screen.	p.53

- The functions and operations for the preview key ⑧ is the same in both the pattern editing screen and the embroidering settings screen.

■ In the “Manual Color Sequence” mode

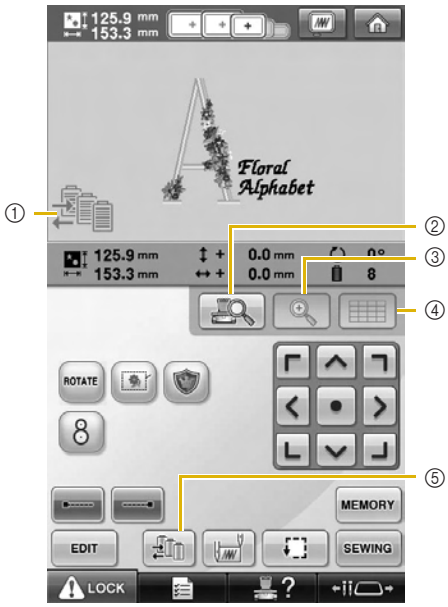

No.	Display Key Name	Function	Page
①	Manual color sequence mode icon	This illustration appears when the sewing machine is in the “Manual Color Sequence” mode.	p.132
②	Camera view key	Touch to view the needle drop point from the LCD screen without actually lowering the needle.	p.103
③	Camera zoom key	Touch to zoom up the camera view twice the size of normal view. This key is available when the camera view is displayed.	p.179
④	Camera grid display key	Touch to display the grid lines on the camera view for hooping the fabric when embroidering the border pattern. This key is available when the camera view is displayed.	p.104
⑤	Manual color sequence key	Touch to change the needle bar color setting. This key appears when you set “Manual Color Sequence” to “ON” in settings screen.	p.133

Understanding the embroidering screen

From this screen, the total number of thread colors and the sewing time can be checked, the needle bar settings can be specified, and the needle placement forward or backward can be done. Keys available in this screen differ when you set “Manual Color Sequence” to “ON” in settings screen. (Refer to page 132.)

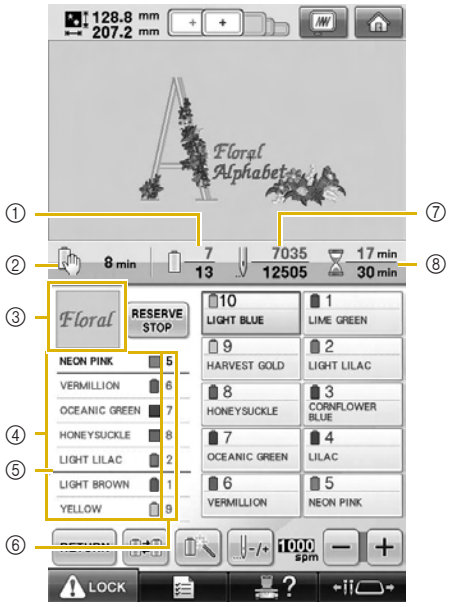

No.	Display / Key Name	Function	Page
①	7 / 13 Sewing order	The bottom value shows the total number of thread colors in the pattern and the top value shows the thread colors that is currently being sewn.	
②	8 min Time until the machine stops	Shows the amount of time until the machine will stop. When the last thread spool is being sewn, the number appears in red. If the pattern contains 11 or more colors, this shows the time until the thread spool will need to be changed.	p.111
③	Floral Region display	Shows the part of the pattern that will be sewn with the thread color shown first in the thread color sequence display.	

No.	Display / Key Name	Function	Page
④	NEON PINK VERMILLION Thread color sequence display	Shows the order for the thread color changes. During embroidering, this display scrolls so that the color of the thread currently being sewn appears at the top.	
⑤	Spool change indicator	This red line indicator shows when the thread spools will need to be changed. The thread spools will need to be changed at the point between the two thread colors where the indicator is displayed.	p.111
⑥	5 / 6 / 7 Needle bar number	Indicates the needle bar number where the thread color at the left is assigned.	
⑦	7035 / 12505 Stitch count	The bottom value shows the total number of stitches in the pattern and the top value shows how many stitches have already been sewn.	
⑧	17 min / 30 min Sewing time	The bottom value shows the total amount of time required to sew the pattern and the top value shows how much time has already passed sewing.	

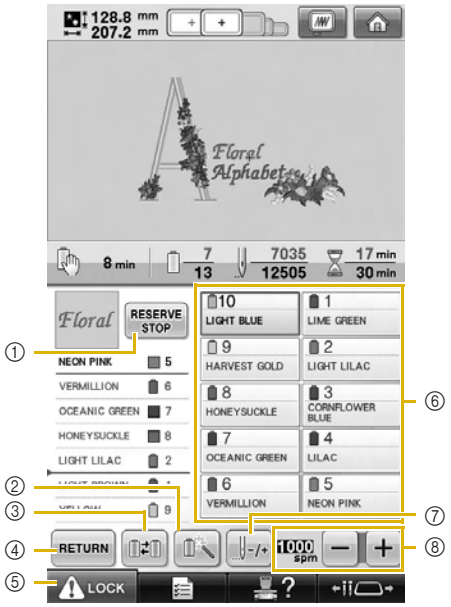

No.	Display / Key Name	Function	Page
①	RESERVE STOP Reserve Stop key	While sewing embroidery, touch this key for the machine to stop prior to the next color beginning.	p.140
②	Temporary needle bar settings key	Enables the needle bar settings to manually be specified.	p.142
③	Switch spool key (Not available in the "Manual Color Sequence" mode)	Change the needle bar settings from the screen without changing the thread spools on the machine.	p.108
④	RETURN Return key	Touch this key to quit sewing and return to the embroidering settings screen.	
⑤	LOCK Unlock key	Unlocks the machine so it can start sewing within 10 seconds. When this key is touched, the start/stop button flashes in green.	p.64

No.	Display / Key Name	Function	Page
⑥	1 LIME GREEN Needle bar key	Touch a key to move the needle bar position to the selected needle bar number. Use when threading the needle with the automatic needle-threading mechanism.	
	Thread color set up display	Shows the color and the thread color name (number) for the thread on the needle bar indicated on the key. Thread the machine as indicated here.	p.54
⑦	Forward/ Backward stitch key	Moves the needle forward or backward through the stitching. Use this key in the following situations: ● If the thread breaks or runs out while embroidering ● To restart sewing from the beginning ● To continue sewing after the machine was turned off	p.115
⑧	1000 spm Maximum sewing speed key	Specifies the maximum sewing speed.	p.139

Memo

- The thread color numbers in the thread color sequence display and the thread color set up display can be changed, for example, to the color name or the thread color number for other brands. (Refer to "Changing the thread color information" on page 220.)

When You Have a Question, This May Help You

Technical Terms

■ **DST**

This is the extension of Tajima data file (*.dst) that is one of the data formats of embroidery patterns. Tajima data does not contain color information, therefore the embroidery machine automatically assigns colors when a Tajima (.dst) file is loaded. (Refer to page 244.)

■ **Needle number**

The needles are numbered from right to left. The far right needle is number 1 needle. (Refer to page 8.)

■ **Needle at the "embroidering position"**

This is the needle that is placed above the needle hole in the needle plate. The needle bar case is moved to position that particular needle with the next thread color to the "embroidering position".

Also when using the needle threader, the needle that is going to be threaded should be moved to the "position of embroidery". (Refer to page 62 and page 63.)

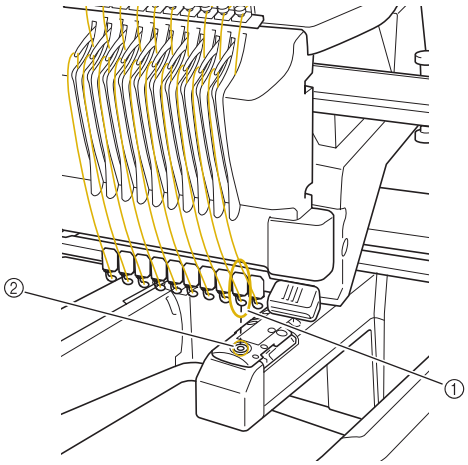

① Needle
② Needle hole in the needle plate

■ **Wiper**

This is the mechanism for pulling the thread. The wiper pulls the thread when the needle threader is used.

The wiper also pulls the thread from the material when the machine trims the thread. This makes trimming threads after embroidering un-necessary. (Refer to page 61.)

Patterns

Following patterns can be processed by the machine to embroider.

- Embroidery data with *.pes, *.phc or *.dst format.
  Use USB media to transfer the data to the machine.
  Using the USB cable, the data can be transferred from the PC to the machine.
- Optional embroidery cards
- Embroidery patterns created by digitizing software program
- The patterns saved on USB media by the machine

Embroidering

■ **Customize the embroidery colors**

- Use the thread color function by selecting either 64 colors or 300 colors, or by setting the custom thread color table on the pattern editing screen. For more details, see page 198 and page 200.
- Use the "Temporary needle bar setting" function by selecting the key on the "embroidering" screen. More details please see the page 142.

■ **Resume an unfinished pattern from the last time the machine was switched off.**

- The machine remembers the pattern and the position even after turning off the power. And the machine can resume the embroidery when the machine turns on again. (Refer to "Resume Embroidering After Turning Off the Machine" on page 120.)

■ **Getting false thread breakage error**

- Check that the position of the upper thread is under the upper thread guide plates. (Refer to page 56.)
- Check that the position of the upper thread is around the thread tension disc. (Refer to page 58.)

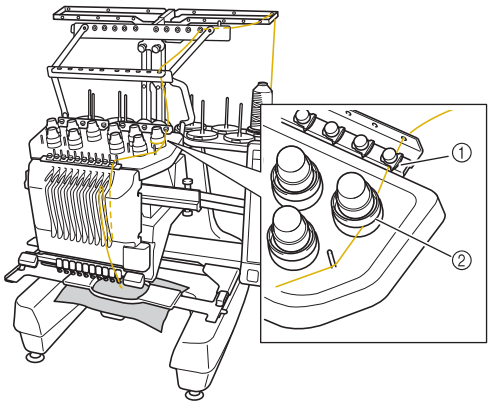

① Upper thread guide plates
② Thread tension disc

■ **Thread tension changed suddenly**

- Thread is caught on a rough edge of the spool of upper thread.
- Upper thread is caught under the spool of thread.
- The thread dust or lint is gathered under the bobbin's tension spring.

■ **The embroidery frame becomes separated from the carriage**

Make sure that the positioning pins are placed into the frame's positioning slot and hole. (Refer to page 51.)
To insure proper registration of pattern for embroidery, turning off the machine and turning it back on will allow the embroidery arm to reset it's registration points.

■ **Unable to detach the frame from the machine**

Touch and to move the carriage, then the frame will be detachable. (Refer to page 90.)

■ **Cancel the current design and start again**

Select the "Home" key on the upper right of the screen. The pattern and all information will be deleted. (Refer to page 71.)

USB connectivity

You can perform many functions using the USB ports on the machine. Connect the appropriate devices according to the feature of each ports.

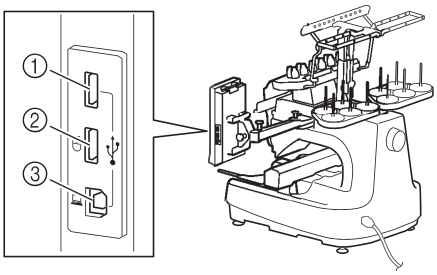

① Primary (top) USB port for media or card Reader/USB card writer module* (USB2.0)

* If you have purchased the Palette Ver5 or later, Palette petite or Palette PTS, you can plug the included USB card writer module into the machine as an embroidery card reader, and recall patterns.

② USB port for mouse (USB1.1)
③ USB port for computer

Note

- The processing speed may vary by port selection and quantity of data.
- Do not insert anything other than USB media into the USB media port. Otherwise, the USB media drive may be damaged.

■ **Using USB media or embroidery card Reader/ USB card writer module***

When sending or reading patterns using the USB media or the embroidery card Reader/USB card writer module*, connect the device to the primary (top) USB port.
The primary (top) USB port processes the data faster than the other ports.

* If you have purchased the Palette Ver5 or later, Palette petite or Palette PTS, you can plug the included USB card writer module into the machine as an embroidery card reader, and recall patterns.

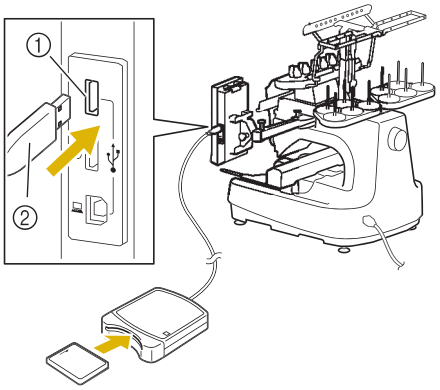

① Primary (top) USB port
② Embroidery card Reader/USB card writer module* or USB media

Note

- Two USB media cannot be used with this machine at the same time. If two USB media are inserted, only the USB media inserted first is detected.
- Use only an embroidery card reader designed for this machine. Using an unauthorized embroidery card reader may cause your machine to operate incorrectly.
- Embroidery patterns cannot be saved from the machine to an embroidery card inserted into a connected USB card writer module.

Memo

- USB media is widely used, however some USB media may not be usable with this machine. Please visit our website (www.babylock.com) for more details.
- Depending on the type of USB media being used, either directly plug the USB device into the machine's USB port or plug the USB media Reader/Writer into the machine's USB port.
- You can plug the optional embroidery card Reader/USB card writer module* into the primary (top) or center port, when the mouse is not connected.
- You can plug a USB media into the center port, but the primary (top) USB port processes the data faster. It is recommended to use the primary (top) USB port.

■ Connecting the machine to the computer

Using the included USB cable, the sewing machine can be connected to your computer.

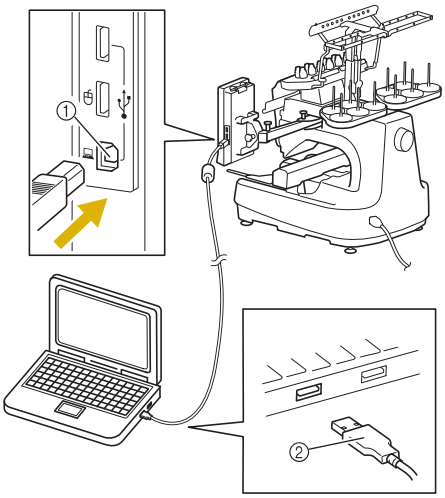

① USB port for computer
② USB cable connector

Note

- The connectors on the USB cable can only be inserted into a port in one direction. If it is difficult to insert the connector, do not insert it with force. Check the orientation of the connector.
- For details on the position of the USB port on the computer (or USB hub), refer to the instruction manual for the corresponding equipment.
- You can arrange the USB cable using the included USB clamp. (Refer to "Connecting the USB using the included USB cord clamps" on page 170.)

■ **Using a USB mouse**

The USB mouse, connected to the sewing machine, can be used to perform a variety of operations in the screens.
Connect a USB mouse to the USB 1.1 port marked with . You can also connect a USB mouse to the other USB port (USB 2.0).

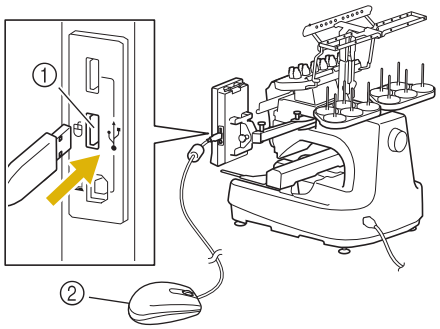

① USB port for mouse
② USB mouse

Note

- Do not perform operations with the mouse at the same time that you are touching the screen with your finger or the included touch pen.
- A USB mouse can be connected or disconnected at any time.
- Only the left mouse button and its wheel can be used to perform operations. No other buttons can be used.
- The mouse pointer does not appear in the screen saver.

USB mouse operation

■ **Clicking a key**

When the mouse is connected, the pointer appears on the screen. Move the mouse to position the pointer over the desired key, and then click the left mouse button.

Memo

- Double-clicking has no effect.

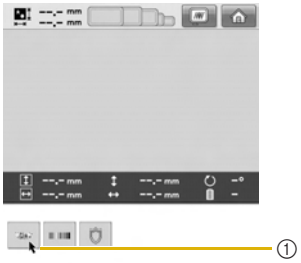

① Pointer

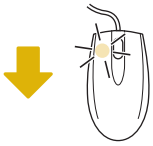

■ **Changing pages**

Rotate the mouse wheel to switch through the tabs of the pattern selection screens.

Memo

- If page numbers and a vertical scroll bar for additional pages are displayed, rotate the mouse wheel or click the left mouse button with the pointer on ◄ / ► to display the previous or next page.

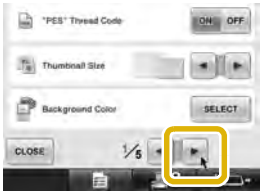

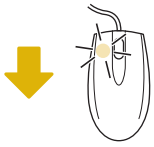

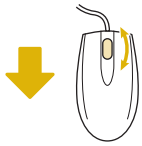

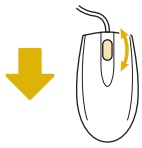

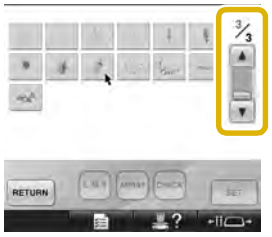

■ Changing the size

Refer to “Changing the size of a pattern” on page 182.

1 **Touch** SIZE.

2 **Change the size of the pattern.**

- Rotate the mouse wheel away from you to shrink the pattern in the same way as when is touched.
- Rotate the mouse wheel toward you to enlarge the pattern in the same way as when is touched.

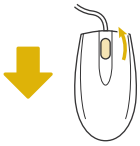

■ Rotating the pattern

Refer to “Adjusting the angle” on page 100 and “Rotating a pattern” on page 183.

1 **Touch** ROTATE.

2 **Rotate the pattern.**

- Rotate the mouse wheel away from you to rotate the pattern 10 degrees to the left in the same way as when 10° is touched.
- Rotate the mouse wheel toward you to rotate the pattern 10 degrees to the right in the same way as when 10° is touched.

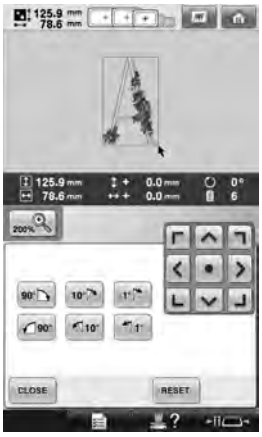

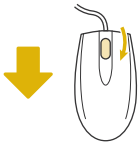

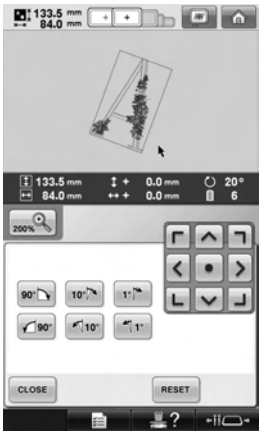

3

OTHER BASIC PROCEDURES

This chapter provides explanations on operations other than those described in chapter 2, such as sewing a pattern with eleven or more colors, changing the needles and changing thread spools.

Changing the Needle 88
Replacing the needle 88
Correctly Using the Embroidery Frames 90
Embroidery frame holders 90
When difficult to replace the embroidery frame 90
Types of embroidery frames/frame holders and their applications 91
Attaching Iron-On Stabilizer (Backing) to Fabric 93
Hooping the Fabric 94
Hooping the fabric in the extra-large and large embroidery frames 94
Using the embroidery sheet 95
Large/small pieces of fabric 96
Embroidery Frame Position and Movement 97
Changing the Embroidering Position 99
Adjusting the angle 100
Aligning the Embroidering Position 103
Using the built-in camera 103
Using the included embroidery positioning sticker 105
Switching the Thread Colors on the Screen 108
Embroidering a Pattern Containing Eleven or More Colors 110
Checking if thread spool changes are necessary 111
Changing the Thread Spools with Designs of Eleven or More Colors 113
Change thread spools message and spool thread indicators 113
Easily changing the thread spools 114
If the Thread Breaks or the Bobbin Thread Runs Out While Embroidering 115
If the upper thread breaks 115
If the bobbin thread breaks or runs out 117
Embroidering From the Beginning or Middle of the Pattern 118
Resume Embroidering After Turning Off the Machine 120
Adjusting the Thread Tension 122
Adjusting the tension of the bobbin thread 122
Adjusting the tension of the upper thread 123

Changing the Needle

If the needle is bent or the tip of the needle is broken, replace the needle with a new one. Use the included Allen screw driver to replace the needle with one that is designed specifically for this machine and that passes the test described in “Checking the needle” on page 35.

Replacing the needle

1 Turn off the embroidery machine.

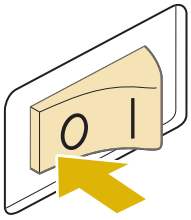

CAUTION

- **Be sure to turn off the embroidery machine before replacing the needle, otherwise injuries may result if the machine starts sewing.**

2 Loosen the needle set screw and remove the needle.

Hold the needle with your left hand, and then hold the Allen screw driver in your right hand and turn the needle set screw counterclockwise.

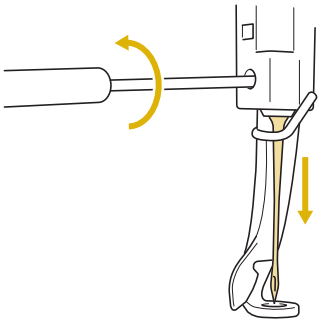

Note

- Be sure to use the included Allen screw driver to replace the needle, otherwise too much force may be applied to the needle, causing it to break.
- Do not apply extreme force when loosening or tightening the needle set screw, otherwise the machine may be damaged.

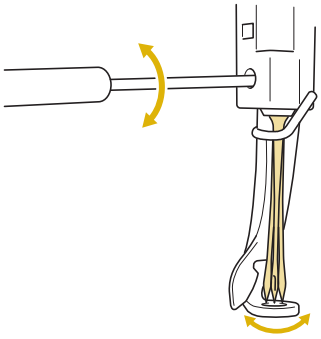

3 With the flat side of the needle toward the back of the machine, insert the needle all the way up until it touches the needle bar stopper.

Pass the needle through the hole in the presser foot, and then use the needle changing tool to lift up the needle.

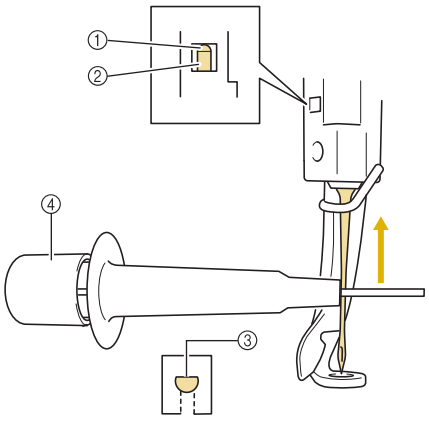

① Needle bar stopper
② Needle
③ Flat side of needle
④ Needle changing tool (Threader)

Hold the needle changing tool and press the end of the needle changing tool ① in to extend the needle-mounting clamp ②. Attach the clamp to the needle, and then release the pressed area to clamp the needle. To unclamp the needle, press ① again.

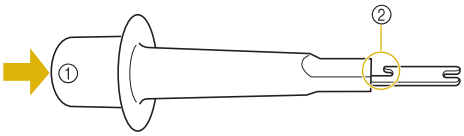

① End of the needle changing tool
② Needle mounting clamp

4 While holding the needle in place with your left hand, tighten the needle set screw.
Use the Allen screw driver to turn the needle set screw clockwise.

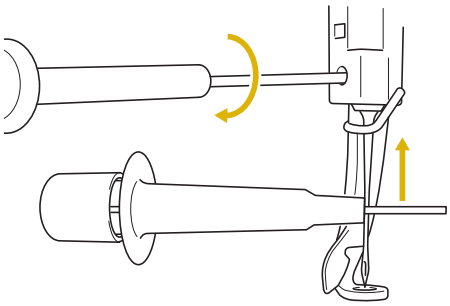

CAUTION

- **Be sure to insert the needle in the needle bar chamber until it reaches the needle bar stopper and securely tighten the needle set screw with the Allen screw driver, otherwise the needle may break or the machine may be damaged.**
- **If the needle is not fully inserted, the hook of the automatic needle-threading mechanism will not pass through the eye of the needle during automatic needle threading, and the hook may bend or the needle cannot be threaded.**
- **If the hook of the automatic needle-threading mechanism is bent or damaged, contact your authorized retailer.**

Correctly Using the Embroidery Frames

Various types of embroidery frames can be used with this machine to suit your project.
In addition to the four included embroidery frames, there are many frames that can be used with this embroidery machine. (Refer to “Optional accessories” on page 24.)

CAUTION

- **Only use embroidery frames of the sizes indicated in the screen, otherwise the embroidery frame may hit the presser foot, which may result in injuries.**

Embroidery frame holders

Two types of embroidery frame holders (embroidery frame holder A and embroidery frame holder B) are included with this machine. Embroidery frame holder A is used with the four included embroidery frames. Embroidery frame holder B is used with the optional embroidery frames. In addition, if optional embroidery frame holder C is used, a frame from the optional round frame series can be installed. For details on which embroidery frame can be installed on each embroidery frame holder, refer to “Types of embroidery frames/frame holders and their applications” on page 91.

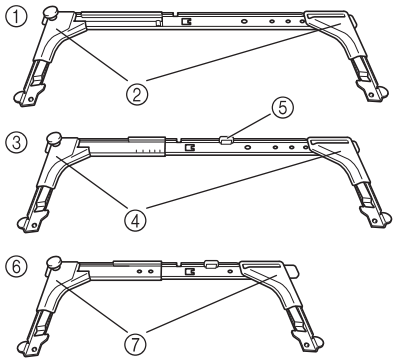

① Embroidery frame holder A
② White corner covers
③ Embroidery frame holder B
④ Light gray corner covers
⑤ Magnet
⑥ Embroidery frame holder C (optional)
⑦ Dark gray corner covers

When difficult to replace the embroidery frame

Depending on the position of the needle bars, it may be difficult to replace the embroidery frame. In that case, follow the procedure described below to move the embroidery frame.

1 **Touch** .

▶ The needle bar move screen appears.

2 **Touch** .

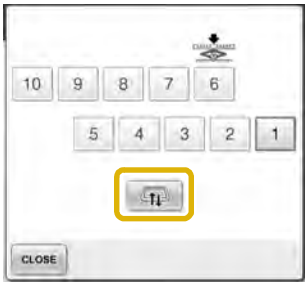

▶ The carriage automatically moves to a position where the embroidery frame can easily be replaced.

- Touch CLOSE to close the needle bar move screen and to move the carriage to the previous position.

Types of embroidery frames/frame holders and their applications

Embroidery type		Embroidering area / Usage	Reference
Embroidery frame holder A	Extra-large embroidery frame	200 mm (H) × 360 mm (W) (7-7/8 inches (H) × 14 inches (W))	(Refer to "Hooping the Fabric" on page 94.)
		Use when embroidering connecting characters or patterns, combined patterns or large embroidery patterns.	
	Extra-large embroidery frame (optional)	200 mm (H) × 300 mm (W) (7-7/8 inches (H) × 11-3/4 inches (W))	
		Use when embroidering connecting characters or patterns, combined patterns or large embroidery patterns.	
	Flat frame (optional)	200 mm (H) × 300 mm (W) (7-7/8 inches (H) × 11-3/4 inches (W))	Consult your nearest Baby Lock retailer.
		Use when embroidering jackets and other thick garments.	
	Large embroidery frame	130 mm (H) × 180 mm (W) (5-1/8 inches (H) × 7-1/8 inches (W))	(Refer to "Hooping the Fabric" on page 94.)
		Use when embroidering patterns with a size less than 130 mm (H) × 180 mm (W) (5-1/8 inches (H) × 7-1/8 inches (W))	
	Medium embroidery frame	100 mm (H) × 100 mm (W) (4 inches (H) × 4 inches (W))	(Refer to "Hooping the Fabric in the Embroidery Frame" on page 49.)
		Use when embroidering standard-sized patterns.	
	Small embroidery frame	40 mm (H) × 60 mm (W) (1-1/2 inches (H) × 2-3/8 inches (W))	
		Use when embroidering small-sized patterns, such as nametags.	

3

Embroidery type		Embroidering area / Usage	Reference
Embroidery frame holder B	Quilt frame (optional)	200 mm (H) × 200 mm (W) (7-7/8 inches (H) × 7-7/8 inches (W)) Use when embroidering pieces for quilts.	Consult your nearest Baby Lock retailer.
	Border frame (optional)	100 mm (H) × 300 mm (W) (4 inches (H) × 11-3/4 inches (W)) Use when embroidering a long string of characters or patterns.	
	Jumbo Frame (optional)	360 mm (H) × 360 (W) mm (14 inches (H) × 14 inches (W)) Use when embroidering combined patterns with a size less than 350 mm (H) × 200 mm (W) (13-3/4 inches (H) × 7-7/8 inches (W)) or patterns with a maximum size of 350 mm (H) × 350 mm(W) (13-3/4 inches (H) × 13-3/4 inches (W)).	Refer to "Embroidery Patterns for the Optional Jumbo Frame" on page 249.
Embroidery frame holder C (optional)	Round frame (optional) ∅=diameter	∅100 mm (4 inches) ∅130 mm (5 inches) ∅160 mm (6 inches) Use when adding a built-in embroidery pattern to a sleeve. Select the frame appropriate for the size of the pattern.	Consult your nearest Baby Lock retailer.
Cap frame wide type (optional)		60 mm (H) × 360 mm (W) (2-3/8 inches (H) × 14 inches (W)) Use when embroidering caps. Baseball (golf) caps, tulip hats and bucket hats can be embroidered with these frames. These frames cannot be used with hats having a front area of 60 mm (2-3/8inches) or less, such as sun visors and children's hats. In addition, these cannot be used with hats that have a brim longer than 80 mm (3-1/8 inches).	(For details on attaching this frame, refer to "Using the Optional Cap Frame" on page 253.)
Cylinder frame (optional)		80 mm (H) × 90 mm (W) (3 inches (H) × 3-1/2 inches (W)) Use when embroidering tubular and curved fabric, such as shirt sleeves and trousers.	Consult your nearest Baby Lock retailer.

Note

- The embroidery frame indicators show all embroidery frame sizes in which the embroidery pattern can be sewn. Be sure to use an embroidery frame of the most suitable size. If the embroidery frame that is used is too large, the pattern may be misaligned or the fabric may pucker.
- All genuine embroidery frames that can be used with EMP6, BMP6, BMP8 and BMP9 can be installed on this machine.
- When sewing with a following optional embroidery frame; jumbo frame, border frame, quilt frame or flat frame, the optional table must be installed to the machine.
- Due to the weight of the embroidery frame and fabric it is recommended that the optional table be used, to prevent the frame holder from bending, which may result in the distortion of your design or machine damage.

Attaching Iron-On Stabilizer (Backing) to Fabric

In order to prevent shrinkage of the stitching or misaligned patterns, we recommend that iron-on stabilizer (backing) be used for embroidering.

CAUTION

- **When embroidering on thin or stretch fabrics, fabrics with a coarse weave or fabrics that easily allow the stitching to shrink, be sure to use iron-on stabilizer (backing) for embroidering. If iron-on stabilizer (backing) is not used while embroidering, the needle may bend or break or the pattern may become misaligned.**

1 **Using a steam iron, affix the iron-on stabilizer (backing) to the back of the fabric.**

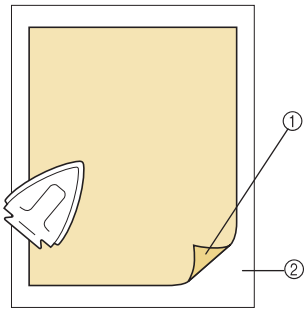

① Adhesive side of iron-on stabilizer (backing)
② Fabric (wrong side)

- When embroidering fabric that should not be ironed or when embroidering an area that is difficult to iron, hoop a layer of the iron-on stabilizer (backing) under the fabric in the embroidery frame without ironing it.

Note

- Use a piece of iron-on stabilizer (backing) that is larger than the embroidery frame. When framing the fabric in the embroidery frame, be sure that the stabilizer (backing) is clamped on all edges in order to prevent wrinkles in the fabric.

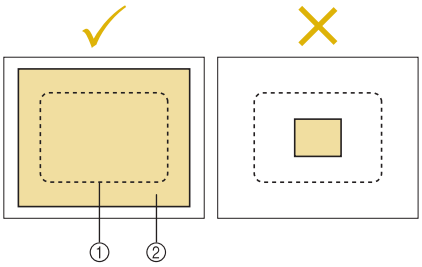

① Area of embroidery frame
② Iron-on stabilizer (backing)

Memo

- When embroidering thin fabrics, such as organza or lawn, use a water-soluble stabilizer (backing). Water-soluble stabilizers dissolve when washed, allowing you to create beautiful embroidery that is not stiff.
- When embroidering fabric with a nap, such as towels or corduroy, hoop a layer of iron-on stabilizer (backing) under the fabric in the embroidery frame without ironing it.
- For other uses of stabilizer (backing), refer to “Stabilizers (backing)” on page 245.

Hooping the Fabric

Hooping the fabric in the extra-large and large embroidery frames

1 Loosen the screw on the outer frame.

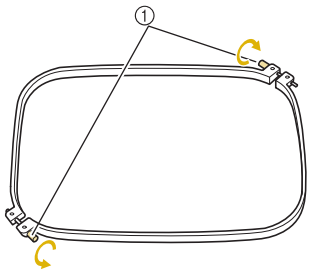

① Screw

2 Place the fabric with right side up on top of the outer frame.

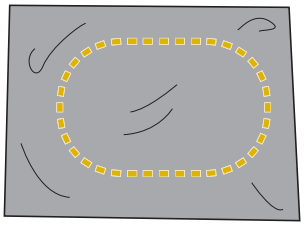

- The outer frame does not have a front or back side. Either side can be used as the front.

3 Press the inner frame into the outer frame.
First insert the inner frame at the corner with the screw Ⓐ, next insert the nearby one corner Ⓑ, and then insert the opposite corner Ⓒ. Then insert the opposite corner (non screw) Ⓓ.

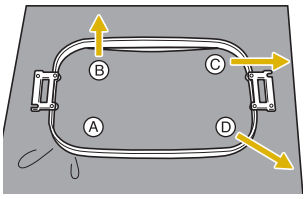

First, align the inner and outer frames at the corner with the screw Ⓐ. Then, while lightly pulling the fabric in the direction indicated by arrow Ⓑ so that the fabric is taut, insert the inner frame at corner Ⓑ. In the same way, lightly pull the fabric in the direction indicated by arrow Ⓒ and insert corner Ⓒ, and then lightly pull the fabric in the direction indicated by arrow Ⓓ and insert corner Ⓓ.

- Be sure that there are no wrinkles in the fabric after it is stretched in the embroidery frame.

4 While stretching the fabric even more, securely tighten the screw so that the fabric is taut.

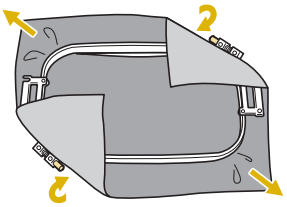

- After stretching the fabric, lightly tapping it should produce a drum-like sound.
- Firmly clamp together the inner and outer frames so that their tops are even.

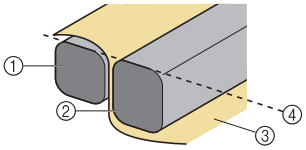

① Outer frame
② Inner frame
③ Right side of fabric
④ Top of inner and outer frames are even

- Using the included disc-shaped screwdriver, firmly tighten the screw.

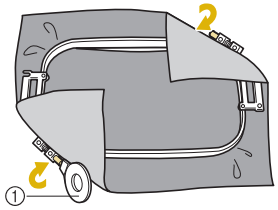

① Disc-shaped screwdriver

Memo

- To correctly frame the fabric in the embroidery frame, we recommend using a flat surface.
- Refer to “Hooping fabric in the small embroidery frame” on page 50 for details on hooping smaller frames.

Using the embroidery sheet

In order to hoop the fabric so that the pattern will be sewn in the correct position, use the guidelines on the embroidery sheet to accurately stretch the fabric in the frame.

1 **With a fabric marker, mark the area of the fabric you want to embroider.**

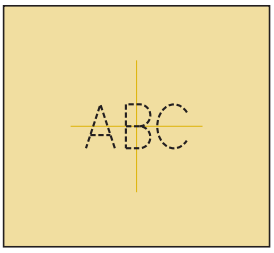

2 **Place the embroidery sheet on the inner frame. Align the guidelines on the embroidery sheet with the marks that you drew on the fabric.**

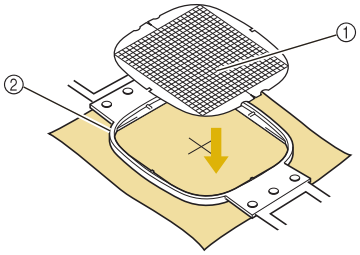

① Guidelines
② Inner frame

3 **Gently stretch the fabric, so that there are no folds or wrinkles.**

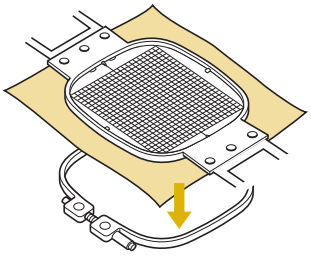

4 **Press the inner frame into the outer frame. Remove the embroidery sheet.**

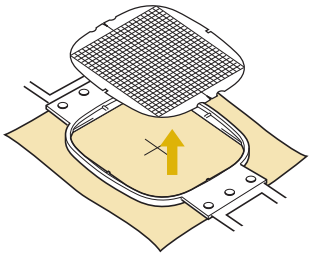

3

Large/small pieces of fabric

This section provides information on embroidering fabric that is either much larger or much smaller than the embroidery frame.

■ Embroidering large pieces of fabric or heavy clothing

When embroidering large pieces of fabric or heavy pieces of clothing, use a clothespin or binder clip to fasten the excess fabric to the embroidery frame so that it does not hang down from the frame. Embroidering with excess fabric hanging down from the embroidery frame may prevent the frame from moving properly and may result in a misaligned pattern.

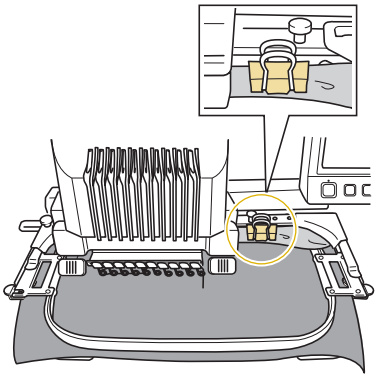

- Use a clothespin or binder clip to fasten the excess fabric to the embroidery frame.

■ Embroidering small pieces of fabric

When embroidering pieces of fabric that are smaller than the embroidery frame, use spray fabric adhesive to attach the fabric to stabilizer (backing) hooped in the embroidery frame. With fabrics where you do not wish to use spray adhesive, baste the fabric to the stabilizer (backing).

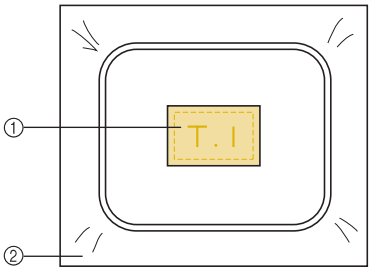

① Fabric
② Stabilizer (backing)

■ Embroidering the corner of fabric

When embroidering the corner of a piece of fabric, use spray fabric adhesive to attach the corner of the fabric to stabilizer (backing), and then hoop the stabilizer (backing) in the embroidery frame. With fabrics where you do not wish to use spray adhesive, baste the fabric to the stabilizer (backing).

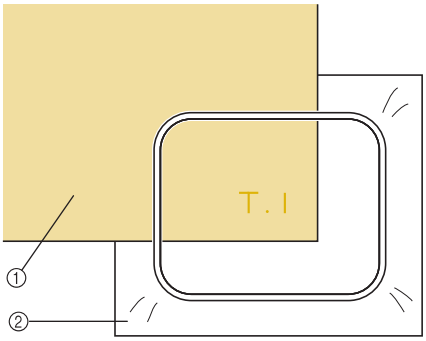

① Fabric
② Stabilizer (backing)

■ Embroidering narrow pieces of fabric, such as ribbon

When embroidering narrow pieces of fabric, use spray fabric adhesive to attach the fabric to stabilizer (backing), and then hoop the stabilizer (backing) in the embroidery frame. With fabrics where you do not wish to use spray adhesive, clamp both ends of the fabric, together with the stabilizer (backing), in the embroidery frame.

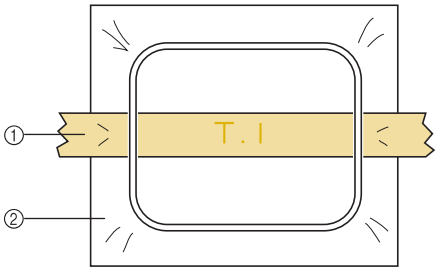

① Ribbon
② Stabilizer (backing)

Embroidery Frame Position and Movement

The following provides information concerning the embroidery frame when operating the embroidery machine.

■ **Embroidery frames that cannot be used for embroidering**

As explained on page 49, the embroidery frame indicators at the top of the screen show the embroidery frames that can be used to sew the currently selected pattern.
Embroidery frames with an embroidering area smaller than the pattern cannot be used. In addition, the embroidery frame cannot be used if the embroidery is smaller than the embroidering area but is positioned so that it extends out of the embroidering area of the frame.

Embroidery frames with an embroidering area smaller than the pattern

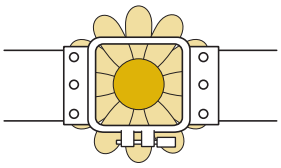

Patterns that extend out of the embroidering area of the frame

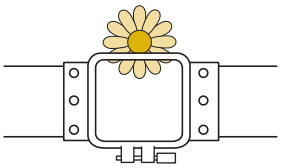

In either of these cases, a message appears on the embroidery machine, warning that the embroidery frame must be changed.

A message indicating that the embroidery frame be replaced may appear even if no embroidery frame is installed.
The embroidery machine detects which embroidery frame is installed according to the position of the left arm of the embroidery frame holder. Therefore, the embroidery frame size is determined by the position of the left arm, even if the embroidery frame is not actually installed. In addition, if the embroidery frame holder is not installed, the embroidery machine determines that the cap frame (optional) is installed.

3

■ **Moving to the correct position**

If the center of the embroidery frame is at the needle drop point in the embroidering area, the embroidery frame is correctly positioned, in other words, at the starting position before embroidering.
If the embroidery frame is changed, the next frame that is installed will not be correctly positioned.
For example, if the extra-large embroidery frame is replaced with the small frame, the following will occur.

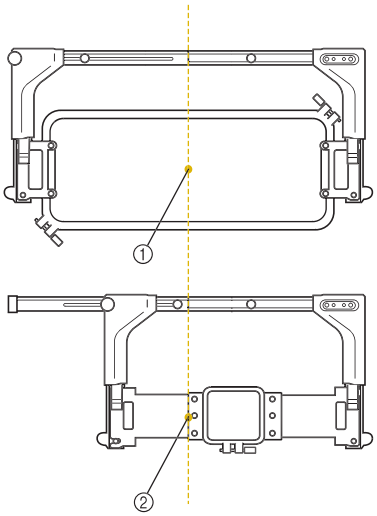

① Center of embroidery frame at the correct position
② Needle position when the embroidery frame is replaced

In order to correct the misalignment of this embroidery frame, the embroidery frame automatically moves to the correct position when any of the following are performed.

- **The embroidery machine is turned on.**
  The embroidery frame will move.
- **The embroidering settings screen is displayed.**
  The embroidery frame will not move if it is correctly positioned.
  If the pattern extends out of the embroidering area for the frame, a message appears, indicating that the embroidery frame should be replaced. Either replace the embroidery frame or return to the pattern editing screen and move the embroidering position.
- **The embroidery frame is replaced while the embroidering settings screen or embroidering screen is displayed, and then the key for checking the embroidering area, for moving the embroidery frame, or for starting embroidering is touched.**
  The embroidery frame will move.
  Since the embroidery frame is moved to the correct position and paused, touch the desired key again.
  If the pattern extends out of the embroidering area for the frame after the frame is moved, a message appears, indicating that the embroidery frame should be replaced. Either replace the embroidery frame or return to the pattern editing screen and adjust the pattern size or embroidering position.

Changing the Embroidering Position

When the embroidery machine is purchased, it was adjusted so that the beginning of the stitching was from the center of the pattern. Therefore, move the frame and adjust the embroidering position so that the center of the pattern aligns with the needle drop point at the sewing position. If you need to align the embroidering position to the specific point, follow the procedure described in “Aligning the Embroidering Position” on page 103. In addition, the angle of the entire pattern can be adjusted if the fabric cannot be hooped evenly within the embroidery frame and the pattern is positioned at an angle on the fabric.

1 **Touch , , , , , , and in the embroidering settings screen.**

Move the embroidery frame so that the needle drop point is at the center of the area where you wish to embroider.

▶ The embroidery frame moves in the opposite direction of the arrow.

▶ The pattern in the pattern display area moves in the same direction of the arrow.

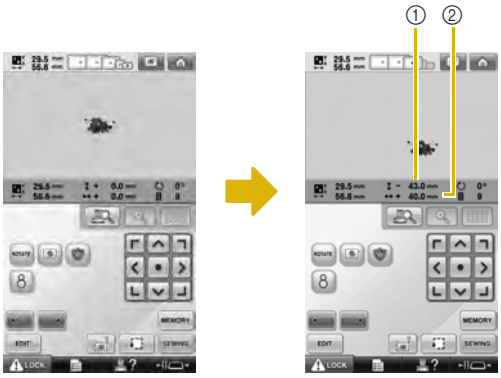

① Shows the vertical distance moved from center
② Shows the horizontal distance moved from center

- Touch to move the embroidery frame back to its original position (where the center of the embroidery frame is aligned with the needle drop point at the sewing position).

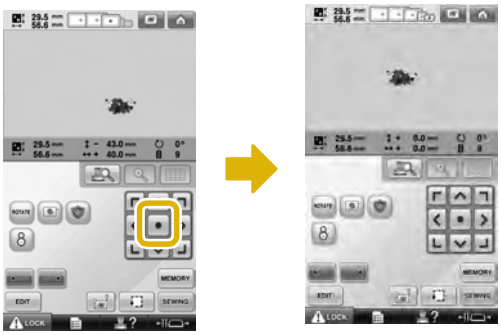

The pattern can also be moved by dragging it. If a USB mouse is connected, move the mouse to position the pointer on the desired pattern, and then while holding in the left mouse button, drag the pattern. The pattern can also be dragged by selecting it directly in the screen with your finger or the touch pen.

■ **Finding the sewing position**

By locking the needle bar (securing the needle and presser foot in the down position), the needle drop point can easily be seen.

1 **As shown in the illustration, insert the Allen screwdriver into the hole in the needle clamp to slowly lower the needle bar down till needle bar stops then clicks into the lock position.**

Note

- Make sure that the needle is not lowered beyond the positioning click into the fabric.

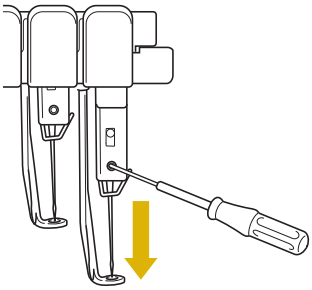

▶ The needle and presser foot are locked in the down position.

2 **Touch the arrow keys in the embroidery settings screen to move the embroidery frame so that the needle drop point is at the center of the area where you wish to embroider.**

- With a USB mouse, your finger or the touch pen, drag the pattern to move it.

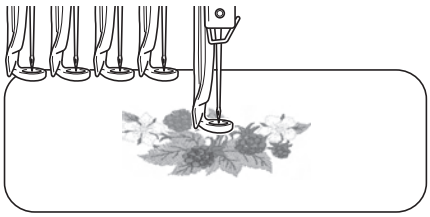

- When specifying the starting of stitching, align the needle drop point with the point specified as the starting of stitching. (For details on specifying the starting/ending of stitching, refer to page 135.)

■ **Unlocking the needle bar**

1 **Display the embroidering screen, and then touch the key for any needle bar other than the one that is locked.**

▶ The needle bar is unlocked and will return to original position.

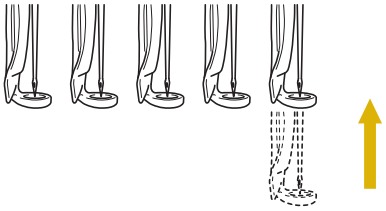

Adjusting the angle

Depending on the type of fabric being embroidered, it may not be possible to stretch the fabric in the embroidery frame at the desired angle. In this case, adjust the angle of the pattern so that it is correctly positioned on the fabric.

1 **Touch** ROTATE **.**

The following screen appears.

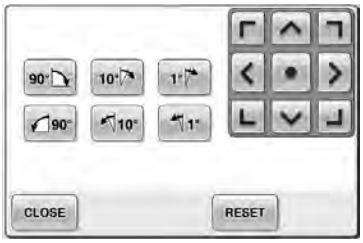

Example: Original angle

90°	Rotates 90 degrees to the right	
10°	Rotates 10 degrees to the right	
1°	Rotates 1 degree to the right	
90°	Rotates 90 degrees to the left	
10°	Rotates 10 degrees to the left	
1°	Rotates 1 degree to the left	
	Moves the pattern in the direction of the arrow on the key.	
RESET	Touch this key to return the pattern to its original angle.	
CLOSE	Touch this key to close this screen.	

2 Touch the keys to adjust the pattern to the desired angle.

Each touch of a key rotates the pattern.

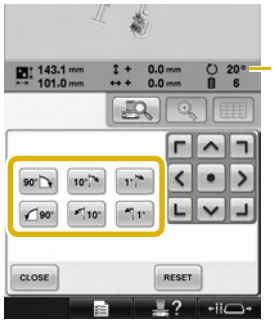

① Shows the angle of the pattern after a key is touched to change it.

- To return the pattern to its original angle, touch RESET.

3 If necessary, touch the arrow keys to adjust the position of the pattern.

For more details, refer to page 99.

4 If necessary, touch CLOSE and then touch to check the embroidering area.

For more details, refer to page 53.

5 After making the desired changes, touch CLOSE.

The embroidering settings screen appears again.

3

Memo

- With this operation, fine adjustments can be made to the angle; also, this operation is particularly useful when embroidering items, such as bags and tubular items, that have limitations to being hooped in the embroidery frame.
  Example: When embroidering a pillowcase
  Rotate the pattern 90 degrees to the left before embroidering.

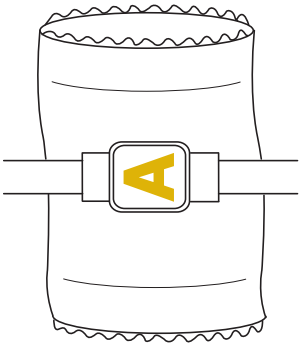

Example: When embroidering a T-shirt
Rotate the pattern 180 degrees. Pass the machine bed through from the waist of the T-shirt, not from the neck, and attach the embroidery frame to the machine. This will prevent the neck of the shirt from being stretched when the embroidery frame is moving.

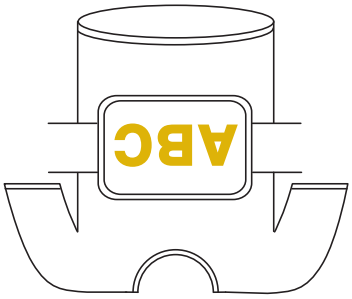

Aligning the Embroidering Position

Using the built-in camera

The camera built into this machine can be used to easily align the embroidering position. This is useful for patterns which need to be embroidered in particular position as shown below.

1 Use a chalk pencil to draw a cross at the desired embroidering location.

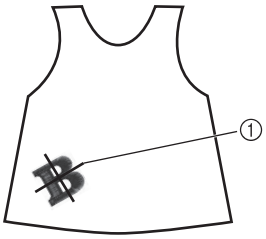

① Chalk pencil mark

- Display the grid lines or cross grid lines in the pattern display area to check the pattern orientation. (Refer to "Centerpoint marker and grid lines" on page 220.)

2 Hoop the fabric.

Note

- When hooping the fabric in the embroidery frame, make sure that the embroidery pattern will fit within the embroidering area of the frame being used.

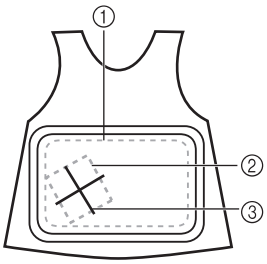

① Embroidering area
② Embroidery pattern size
③ Chalk pencil mark

3 Select the pattern on your sewing machine.

4 Touch in the embroidering settings screen.

5 Touch to set the starting point to the center of the pattern.

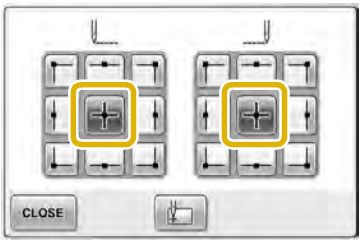

6 **Touch CLOSE.**

7 **Touch .**

8 **Touch the positioning keys to move the embroidery frame until the cross-shaped chalk mark drawn on the fabric is displayed in the camera view window.**

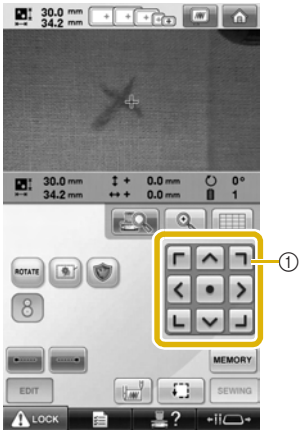

① Positioning keys

9 **Touch to display the grid lines.**

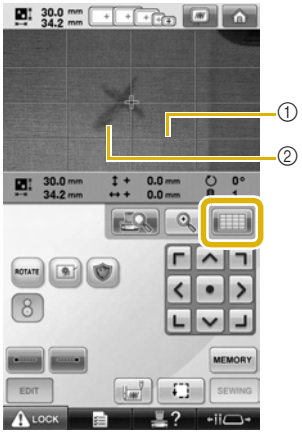

① Grid lines
② Chalk mark on the fabric

- Touch to check the embroidering position.

Memo

- Touch to enlarge the camera view. By enlarging the camera view, you can make a close adjustment for the center point of the pattern moving the embroidery frame little by little.

10 **Touch ROTATE and adjust the orientation of the pattern until the grid lines are parallel with the chalk mark drawn on the fabric. (Refer to "Adjusting the angle" on page 100.)**

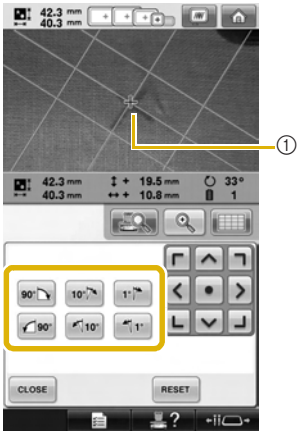

① Center point of the pattern

- Touch the positioning keys to move the embroidery frame until the center point of the pattern in the camera view window is aligned with the chalk mark drawn on the fabric.

11 **Touch to return to the previous screen.**

12 **Touch SEWING.**

13 **Touch LOCK, and then press the start/stop button to start embroidering.**

Using the included embroidery positioning sticker

Using the camera built into this machine and the included embroidery positioning stickers, the embroidering position can easily be aligned.

1 Affix an embroidery positioning sticker to the fabric at the desired embroidering position. Align the center of the large circle in the embroidery positioning sticker with the center of the embroidery pattern.

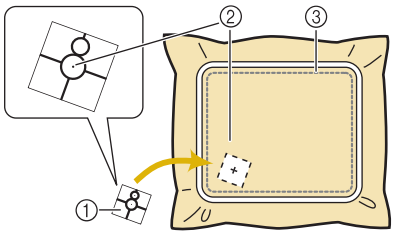

① Embroidery positioning sticker
② Center of embroidery pattern
③ Embroidering area

Note

- When hooping the fabric in the embroidery frame, make sure that the embroidery pattern will fit within the embroidering area of the frame being used.

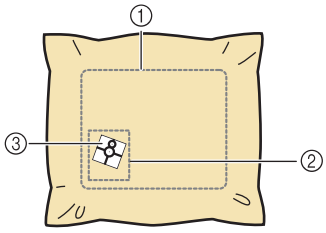

① Embroidering area
② Embroidery pattern size
③ Embroidery positioning sticker

- Depending on the type of fabric to be used, it may not be possible to easily remove the embroidery positioning sticker. Before affixing the embroidery positioning sticker, check how easily the sticker can be removed by affixing it to a scrap of the same type of fabric.

2 In the embroidering settings screen, touch 8.

▶ A screen appears, allowing the area to be selected where the embroidery positioning sticker has been affixed.

3 From the areas displayed in the LCD, touch the area containing the embroidery positioning sticker to select it.

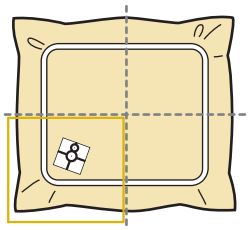

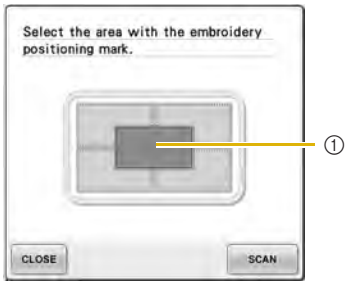

① Inner grid is center of embroidery area.

- The displayed embroidery area differs depending on the attached embroidery frame.

3

Note

- The built-in camera may not be able to detect the embroidery positioning sticker if the four corners of the sticker are not firmly affixed to the fabric. Use tape to firmly affix the sticker to the fabric.
- When using the optional cap frame or cylinder frame, attach the embroidery positioning sticker so that the two circles of the positioning mark fit within one of the embroidering areas.
- If the embroidery positioning sticker has been affixed over two areas, the sticker will be detected no matter which of the two areas is selected.

4 **Touch SCAN.**

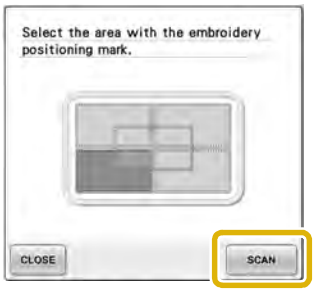

5 **When the following message appears, touch OK.**

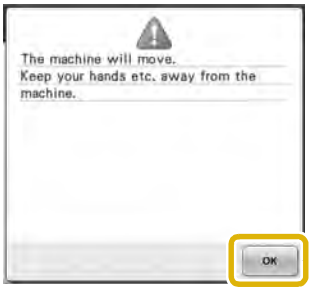

▶ The built-in camera automatically detects the embroidery positioning sticker, and then the embroidery frame is moved so that the center of the embroidery pattern is aligned with the center of the large circle in the embroidery positioning sticker.

6 **When the machine's built-in camera has finished detecting the location of the embroidery positioning sticker, the following message appears.**

Memo

- You can touch to confirm the embroidery position is correctly aligned before removing the embroidery positioning sticker.
  - Touch to display the grid lines which would make it easier to find the position.
  - Touch for the closer image.
  - Touch again to return to the previous screen.

7 **Remove the embroidery positioning sticker from the fabric.**

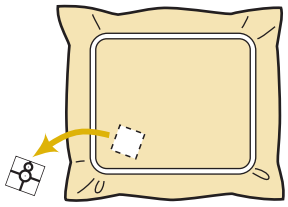

8 Touch CLOSE.

Note

- If the following error message appears, touch CLOSE, remove the embroidery positioning sticker, and then affix it within the embroidering area. Then, touch SCAN again.

9 Touch SEWING.

10 **Touch LOCK, and then press the start/stop button to start embroidering.**

Note

- After all of the included embroidery positioning stickers have been used, new ones can be purchased separately. When purchasing new ones, check "Optional accessories" on page 24 for the part code, and then contact your nearest authorized Baby Lock retailer.

3

Switching the Thread Colors on the Screen

If a thread color on the spool stand is different than the needle position thread color on the screen, the thread colors on the screen can be switched to match the spool stand thread color position.

Memo

- This function is not available when you set "Manual Color Sequence" to "ON" in settings screen.

1 **Touch** .

▶ The spool selection screen appears.

2 **Touch the number of the first needle bar that will be switched.**

- To cancel the selection, touch the same needle number again.

3 **Touch the number of the other needle bar that will be switched. The two needle numbers are connected with an arrow.**

- To cancel the selection, touch the same needle number again.

4 **Touch** **to switch the two thread colors.**

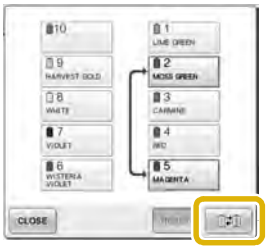

5 **After making the desired changes, touch** CLOSE .

■ **To cancel the thread color settings for all previously stitched design**

Note

- The color settings will be completely canceled even if the machine is in the middle of the embroidery.

1 **Touch** RESET .

▶ The thread color setting is canceled.

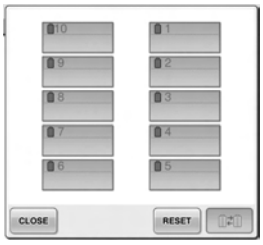

2 **Touch** CLOSE .

▶ Thread colors are assigned by the machine again, regardless of the previous spool setting.

Note

- This function will not clear anchor settings of any of the needles which have been assigned a thread color (Refer to “Reserved Needle Bar and Sewing Speed Settings” on page 145).

Embroidering a Pattern Containing Eleven or More Colors

When embroidering a pattern that uses eleven or more thread colors, it is necessary to change the thread spools. When changing the thread spools, instruction to change the thread spools will appear with the machine automatically stopping.

Memo

- This function is not available when you set "Manual Color Sequence" to "ON" in settings screen.

Assignment of thread colors to needle bars

Thread colors are automatically assigned by the machine to needle bars 1 to 10, starting with the thread colors that are sewn first. (However, if a new pattern has thread colors that are the same as the previously sewn pattern, the thread colors will be assigned to the same needle bar as before, regardless of the sewing order.)
For example, for a pattern with five thread colors and ten thread color changes, the thread colors are assigned as shown below.

1	LIME GREEN	1	Needle bar 1
2	CORNFLOWER BLUE	2	Needle bar 2
3	FLESH PINK	3	Needle bar 3
4	DEEP ROSE	4	Needle bar 4
5	YELLOW	5	Needle bar 5
1	LIME GREEN	1	
2	CORNFLOWER BLUE	2	
3	FLESH PINK	3	
4	DEEP ROSE	4	
5	YELLOW	5	

For a pattern with eleven or more thread colors, the thread spool information is updated when the eleventh thread color is needed.
Afterward, the machine adjusts the assignment of thread colors to reduce the number of times that the thread spools will have to be changed.
For example, for a pattern with eleven thread colors and eleven thread color changes, the thread colors are assigned as shown below.

1	WHITE	1	Needle bar 1
2	YELLOW	2	Needle bar 2
3	RED	3	Needle bar 3
4	SKY BLUE	4	Needle bar 4
5	BLUE	5	Needle bar 5
6	TANGERINE	6	Needle bar 6
7	LIME GREEN	7	Needle bar 7
8	BLACK	8	Needle bar 8
9	CORNFLOWER BLUE	9	Needle bar 9
10	LIGHT LILAC	10	Needle bar 10

Change thread spools here.

4	LILAC	4	Needle bar 4
2	YELLOW	2	Needle bar 2
1	WHITE	1	Needle bar 1
3	RED	3	Needle bar 3
5	HARVEST GOLD	5	Needle bar 5

Since the thread colors on needle bars 1 to 3 will be used again after the thread spools are changed, they will not be replaced. However, different colors are assigned to the other needle bars.

Checking if thread spool changes are necessary

When selecting a pattern, the number of thread changes can be viewed, however, which thread colors are used in the pattern cannot be checked on this screen. Whether or not and when thread spools will need to be changed can be checked with the following indicators.

■ **Time until the machine stops embroidering**
This indicator shows the amount of time until the machine stops embroidering. The machine stops when a spool change is required, or when the machine is set to be stopped by other settings.
If the spool change indicator is appears, the machine will require a spool change. When the time is indicated in red, it is the last color embroidering before the machine stops.

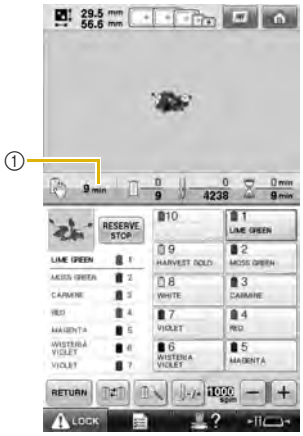

① Time until the machine stops

■ **Spool change indicator (————)**
The spool change indicator in the stitch navigating screen indicates the number of times that the thread spools will need to be changed and the amount of time between changes.

1 **Touch [-/+] in the embroidering screen.**

▶ The stitch navigating screen appears.

2 **Touch [+].**

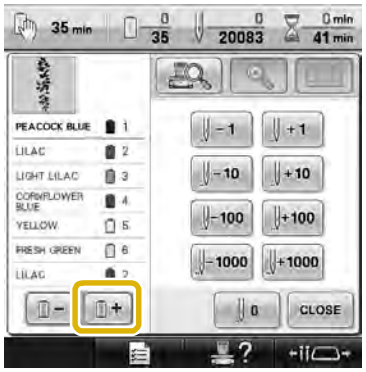

▶ Each time this key is touched, the next color in the thread color sequence display is selected. After reaching the last color in the thread color sequence display, the first color is selected.

3 **Check the position of ————.**

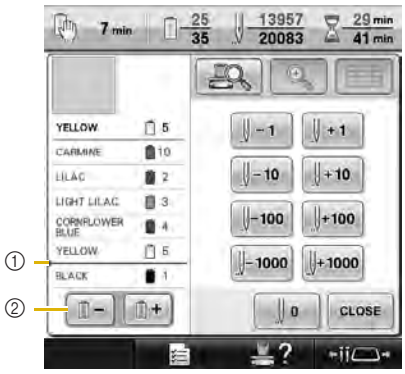

① ———— indicates when the thread spools will need to be changed. The thread spools will need to be changed the number of times that this indicator is displayed and between the two thread colors at the point where it is displayed.

② Touch [−] to scroll up through the thread color sequence display. Each time this key is touched, the previous color in the thread color sequence display is selected. After reaching the first color in the thread color sequence display, the last color is selected.

4 **After checking the desired information, touch [−] or [0] to return to the first color. And then touch [CLOSE].**

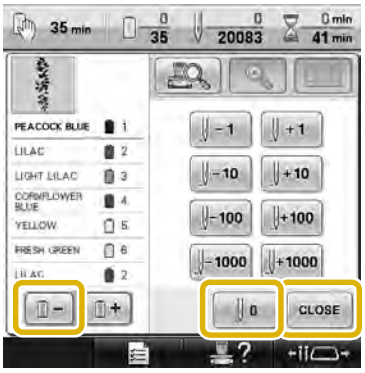

▶ The embroidering screen appears again.

Changing the Thread Spools with Designs of Eleven or More Colors

This section provides details on the spool thread indicators and the change thread spools message in addition to the procedure for easily changing the spools.

Memo

- This feature is not available if “Manual Color Sequence” has been set to “ON” in the settings screen.

Change thread spools message and spool thread indicators

When it is necessary to replace the thread spool while embroidering a pattern that contains eleven or more colors, the machine automatically stops sewing and the message shown below appears. At the same time, the indicator on the spool stand for the spool to be replaced lights up in white, then flashes in the thread color of the next spool to be installed.
When a new pattern is selected, the LCD message and indicators warn you if the thread spools must be changed. Change the thread spools according to their new assignments.

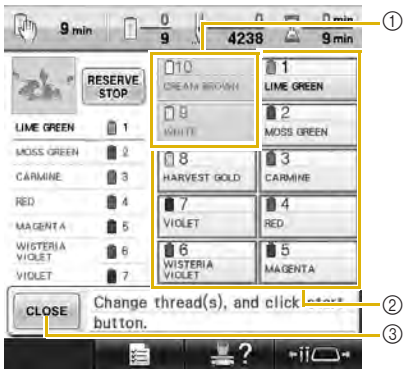

① The thread information for the thread spool needs not to be changed appears in gray.
② The thread information for the thread spool to be changed appears in the new thread color and framed in red.
③ Touch this key to close the message indicating that the thread spool be changed.

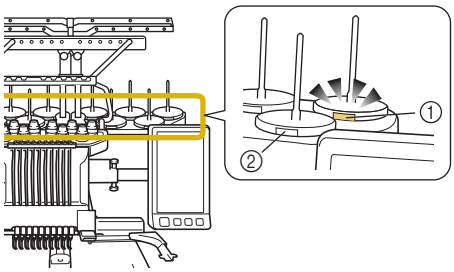

① Flashing in white, then lights up with the next thread color (light turns off when indicates black thread color)
② The thread does not need to be changed on spools where the LED is not flashing.

- Confirm the actual thread color number on the LCD screen. The LED lights indicate the approximate thread color to be used on that particular spool.

After the necessary thread spools have been changed, touch CLOSE to stop the flashing of the spool stand indicator. Then, start embroidering.

Note

- Touch needle bar key to move the needle into the correct position for threading into the new thread color. Refer to “Moving and threading a selected needle bar” on page 62.
- When the embroidering screen appears, the needle bar settings are saved.
- If the needle bar settings are saved and the next pattern that is opened contains thread colors that are the same as those from the previous pattern, the same needle bars will be assigned the same thread colors from the previous pattern.
- The settings for the lighting and flashing of the spool thread indicator can be changed. For details, refer to “Specifying the spool stand LED setting” on page 228.
- If you wish to delete all assigned color on display refer to “To cancel the thread color settings for all previously stitched design” on page 109.

Memo

- To use a different thread color than the one that was specified, use the temporary needle bar setting key, and then change the thread color setting. (For details, refer to “Temporary Needle Bar Setting” on page 142.)
- To minimize changing the thread spools, frequently used thread colors can be specifically assigned to certain needle bars. (For details, refer to “Reserved Needle Bar and Sewing Speed Settings” on page 145.)

Easily changing the thread spools

When replacing the thread spools, it is necessary to re-thread the upper thread. However, the thread spools can easily be changed when replacing a thread spool whose thread is correctly threaded through the machine.

1 Cut the thread between the thread spool and the thread guide.

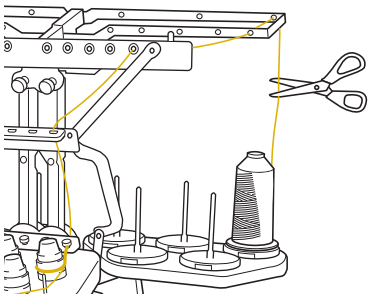

2 Change the thread spool.

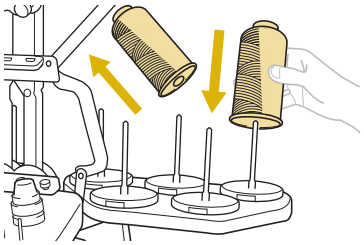

3 Tie the end of the thread on the new spool with the end of the thread remaining from the previous color.

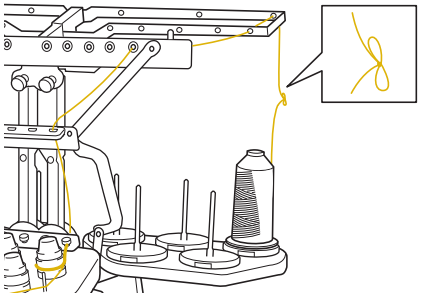

4 Pull out the old thread just after the needle bar thread guide.

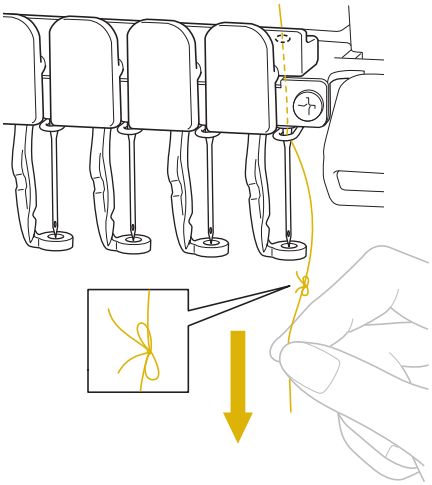

Continue pulling the thread until the knot is above the needle. Cut the knot.

5 Use the automatic needle-threading mechanism to thread the needle with the new thread. (Refer to page 60.)

▶ This completes the changing of the thread spool.

Note

- When pulling out the thread, do not pull the knot through the eye of the needle. If the knot is pulled through the eye of the needle, the needle may be damaged.

If the Thread Breaks or the Bobbin Thread Runs Out While Embroidering

If the thread breaks or the bobbin thread runs out while embroidering, the machine will automatically stop. Since some stitches may be sewn with only one thread, go back through the stitching to a point where stitches have already been sewn before continuing embroidering.

Note

- If the thread sensor is turned off, the machine does not stop until embroidering is finished. Normally, the thread sensor should be turned on. (Refer to page 228.)
- Be careful when going back or forward through the stitching since the embroidery frame moves at the same time.

Memo

- When the thread breaks or the bobbin thread runs out while embroidering, the spool stand LEDs flash to notify you of the problem.

If the upper thread breaks

1 **Re-thread the upper thread. (Refer to page 56.)**

2 **Touch** **.**

▶ The stitch navigating screen appears.

3 **Touch** **to check the needle drop point on the LCD screen.**

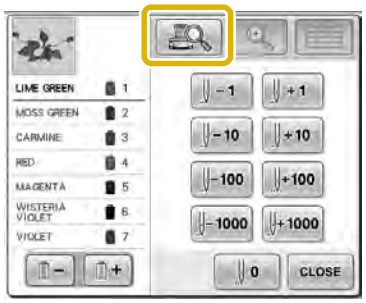

▶ The camera view window appears.

- Touch to zoom up the camera view twice the size of normal view.

4 **Touch** **and** **to go back through the stitching to a point where stitches have already been sewn.**

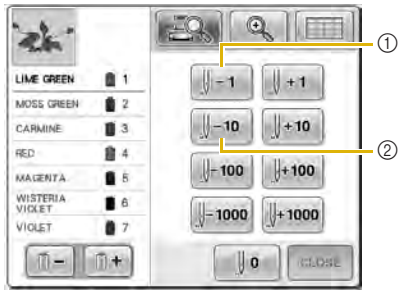

① Each touch of this key moves one stitch back through the stitching.
② Each touch of this key moves ten stitches back through the stitching.

As you move to the area where your design was last stitched, by touching the [-1] or [-10], the embroidery frame will move, allowing you to place the cross mark directly on the last stitch shown.

Note

- It is recommended to stitch over the top of the last two or three stitches for complete coverage.

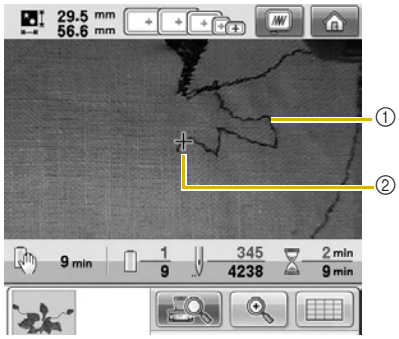

① Stitch line
② Cross mark

If the needle bar is moved back too far through the stitching, touch [+1] or [+10] to go forward through the stitching.

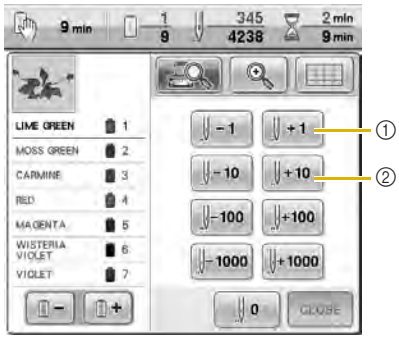

① Each touch of this key moves one stitch forward through the stitching.
② Each touch of this key moves ten stitches forward through the stitching.

5 **Touch** [icon] **.**

6 **Touch** [CLOSE] **.**

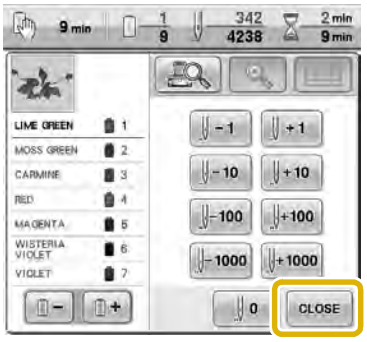

▶ The embroidering screen appears again.

7 **Touch** [LOCK]**, and then press the start/stop button to continue embroidering.**

If the bobbin thread breaks or runs out

1 **Touch LOCK, and then press the thread trimming button.**

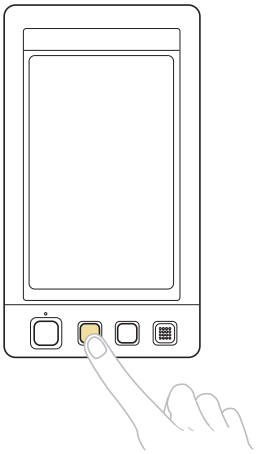

▶ The upper thread is trimmed.

2 **Remove the stitches sewn only with the upper thread.**
Pull the trim end of the upper thread.

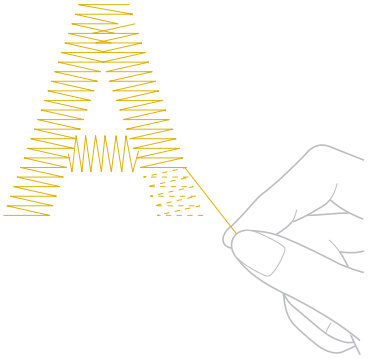

- If the stitches cannot be cleanly removed, trim the thread with scissors.

■ **If the bobbin thread ran out, replace the bobbin at this point in the procedure.**

3 **Replace the bobbin with a bobbin wound with bobbin thread. (Refer to page 38.)**

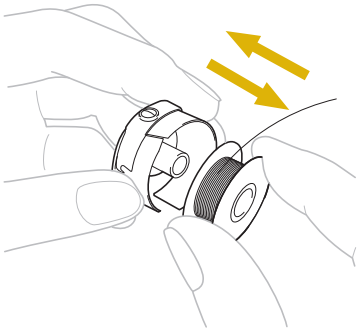

- If the hook cover can be opened, replace the bobbin without removing the embroidery frame from the machine.
- If the machine bed is hidden, for example, with a bag-shaped piece of fabric, or if the hook cover cannot be opened, temporarily remove the embroidery frame. (Refer to page 69.) After replacing the bobbin, re-attach the embroidery frame. (Refer to page 51.)

Note

If the embroidery frame is removed before embroidering of the pattern is finished, take caution, otherwise the pattern may become misaligned.

- Do not apply extreme pressure to the framed fabric and cause it to become loose.
- When removing and re-attaching the embroidery frame, do not allow the frame to hit the carriage or the presser foot.
  If the carriage is hit and moves, turn the machine off, then on again. The correct frame position at the time that the machine was stopped is stored in the machine's memory, and the embroidery frame is returned to the correct position.
- When the embroidery frame is re-attached, make sure that the pins on the left and right arms of the embroidery frame holder securely fit into the holes in the handles on the embroidery frame.

4 **Go back through the stitching in the same way as that described in step 2 of "If the upper thread breaks" on page 115, and then continue embroidering.**

Embroidering From the Beginning or Middle of the Pattern

If you wish to restart embroidering from the beginning, for example, if trial embroidery was sewn and an incorrect thread tension was used or if the wrong thread color was used, restart the embroidering using the forward/backward stitch key. In addition, you can go forward or back through the stitching by thread color or by stitch to start stitching at any position of the pattern.

Note

- Be careful when going back or forward through the stitching since the embroidery frame moves at the same time.

1 Press the start/stop button to stop the machine.

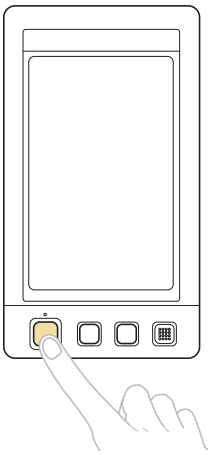

- If necessary, trim and remove the sewn stitches.

2 Touch .

▶ The stitch navigating screen appears.

3 Touch to check the needle drop point on the LCD screen.

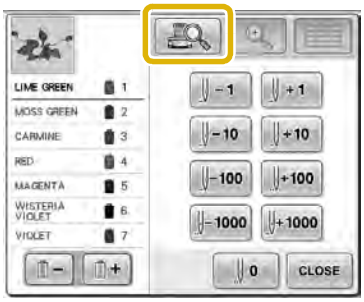

▶ The camera view window appears and the cross mark in the camera view indicates the needle drop point.

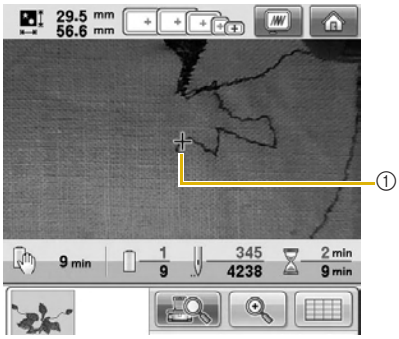

① Needle drop point

- Touch to zoom up the camera view twice the size of normal view.

■ **To start sewing from the beginning**

4 **Touch [0].**

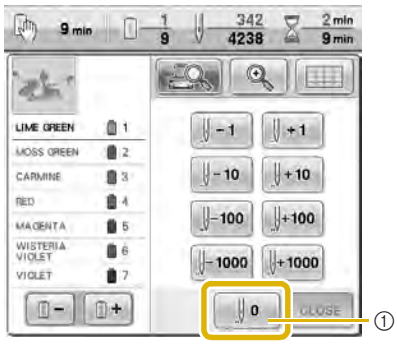

① Touch this key to return to the beginning of the first color.

▶ The embroidery frame moves to the starting position.

■ **To select the stitch from where embroidering is to begin**

5 **Touch [−] and [+] to select a color in the thread color sequence, and then touch [−1], [−10], [−100], [−1000], [+1], [+10], [+100] and [+1000] to select the stitch.**

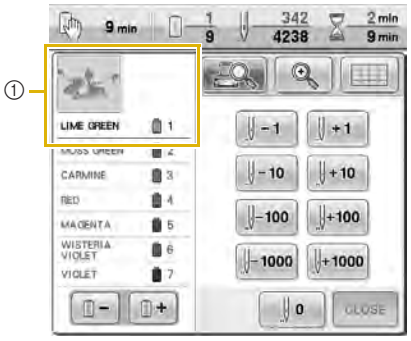

① The thread color at the top of the thread color sequence display is the color of the area currently selected.

[−]	Touch this key once to return to the beginning of the stitching for the color being sewn. Afterward, each touch of this key returns to the beginning of sewing for the previous thread color.
[+]	Each touch of this key advances to the beginning of sewing the next thread color.
[−1]	Each touch of this key moves one stitch back through the stitching.
[−10]	Each touch of this key moves ten stitches back through the stitching.
[−100]	Each touch of this key moves one hundred stitches back through the stitching.
[−1000]	Each touch of this key moves one thousand stitches back through the stitching.
[+1]	Each touch of this key moves one stitch forward through the stitching.
[+10]	Each touch of this key moves ten stitches forward through the stitching.
[+100]	Each touch of this key moves one hundred stitches forward through the stitching.
[+1000]	Each touch of this key moves one thousand stitches forward through the stitching.

▶ The needle bar case moves and the current needle bar moves to the sewing position, and then the embroidery frame moves and current needle position is indicated.

6 **Touch [ ].**

7 **After selecting the stitch from where embroidering is to begin, touch [CLOSE].**

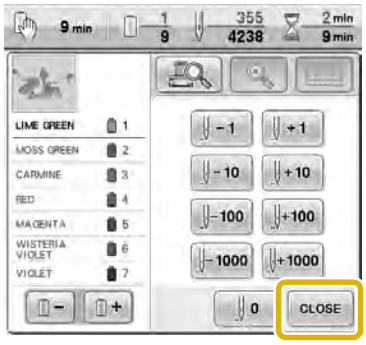

▶ The embroidering screen appears again.

8 **Touch [LOCK], and then press the start/stop button to begin embroidering.**

▶ Embroidering begins from the specified point.

3

Resume Embroidering After Turning Off the Machine

In either of the following cases, the remaining stitches of the embroidery are stored in the machine's memory.

- If the machine's power switch is pressed to turn off after stopping embroidering.
  Cut the thread before the machine's main power switch is turned off, otherwise the thread may be pulled or may catch when the carriage returns to its initial position after the machine is turned on again.
- If the machine was accidentally turned off, for example, due to a power outage, while it was embroidering.
  The remainder of the embroidery can be sewn when the machine is turned on again; however, some of the stitches that were already sewn may be sewn again.

Note

- Be careful when going back or forward through the stitching since the embroidery frame moves at the same time.

1 **Set the main power switch to "I" to turn on the machine.**

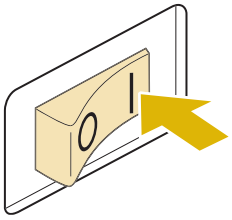

2 **When the machine is turned on, the opening movie is played. Touch anywhere on the screen to display the message below.**

3 **Touch** OK.

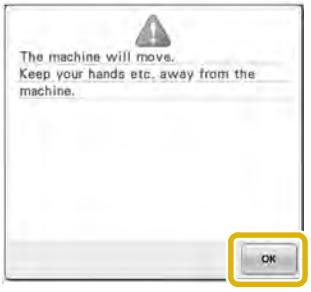

▶ A message appears, asking if you wish to continue embroidering or start a new operation.

4 **Touch** OK.

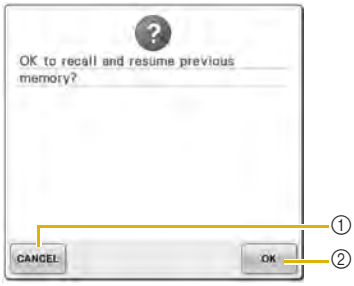

① Touch to cancel embroidering and display the pattern type selection screen to select a new pattern.
② Touch to continue embroidering.

▶ The embroidering screen displayed before the machine was turned off appears.

5 **Touch** .

▶ The stitch navigating screen appears.

6 **Touch** **to check the needle drop point on the LCD screen.**

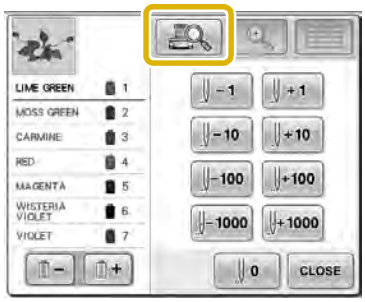

▶ The camera view window appears.

- Touch to zoom up the camera view twice the size of normal view.

7 **Touch** **two or three times to go back two or three stitches.**

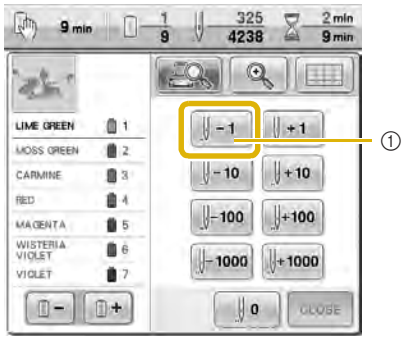

① Each touch of this key moves one stitch back through the stitching.

- Check that the needle drop point is positioned where stitches have already been sewn.

8 **Touch** .

9 **Touch** CLOSE.

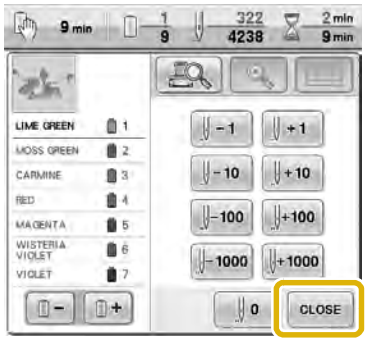

▶ The embroidering screen appears again.

10 **Touch** LOCK**, and then press the start/stop button to continue embroidering.**

Memo

- The machine can be stopped at any time, even while it is embroidering; however, if the machine is stopped when the thread color is changed, it is not necessary to go back through the stitching when embroidering is continued. The machine can also be set to stop when the thread color is changed. (For details, refer to "Setting the Machine to Stop at Color Changes" on page 140.)

3

Adjusting the Thread Tension

The following procedure describes how to adjust the thread tension if the correct thread tension as described on page 68 was not used. After adjusting the tension of the bobbin thread, adjust the tension of the upper thread for each needle bar.

Note

- Be sure to check the tension of the bobbin thread each time that the bobbin is changed. Depending on the bobbin thread type and whether a prewound bobbin is used, the tension of the bobbin thread may differ. For example, when replacing an empty prewound bobbin with one of the same type, be sure to check the tension of the bobbin thread and adjust the tension if necessary.
- Be sure to adjust the tension of the bobbin thread before adjusting the tension of the upper thread.

Adjusting the tension of the bobbin thread

1 Tie the included weight to the end of the thread extending from the bobbin case.

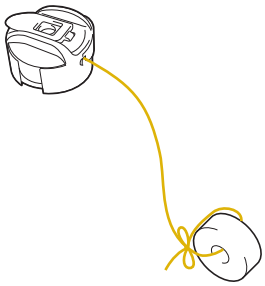

Note

- Different weights are used to adjust pre-wound bobbins and metal bobbins.
  Pre-wound bobbins: Only weight (L)
  Metal bobbins: Weight (L) and weight (S)
  * Weight (S) is included with the optional bobbin winder.

2 As shown in the illustration, hold the bobbin case against a smooth vertical surface.

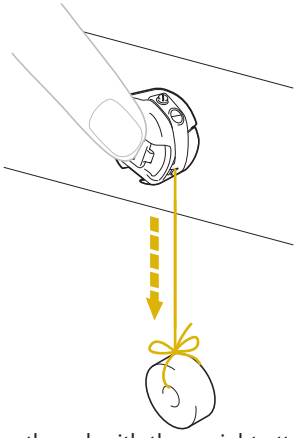

- If the thread with the weight attached is slowly pulled out, the thread tension is correct.

3 Use the included standard screwdriver to turn the tension-adjusting screw and adjust the thread tension.

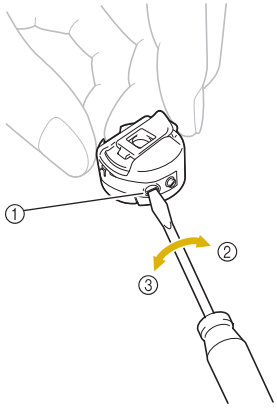

① Tension-adjusting screw
② Tighter
③ Looser

4 **After making the adjustments, try embroidering with all needle bars to check the thread tension.**

Memo

- In the built-in embroidery patterns, one pattern is used for checking the thread tension. By sewing this pattern, the thread tension can easily be checked. For details, refer to page 241.

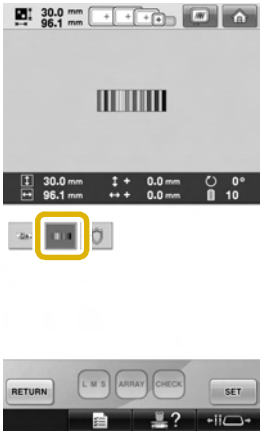

Adjusting the tension of the upper thread

When embroidering, the thread tension should be set so that the upper thread can slightly be seen on the wrong side of the fabric.

1 **Turn the thread tension knobs.**

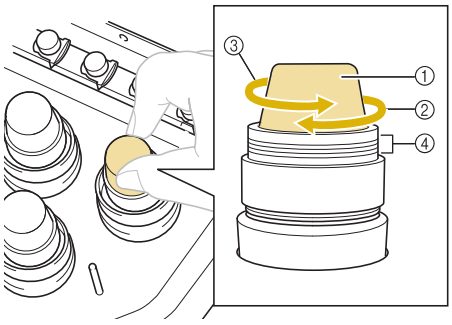

① Thread tension knobs
② Tighter
③ Looser
④ Mark

■ Correct Thread Tension

The pattern can be seen from the wrong side of the fabric. If the thread tension is not set correctly, the pattern will not finish well. The fabric may pucker or the thread may break.

① Right side
② Wrong side

Follow the operations described below to adjust thread tension according to the situation.

Note

- If the thread tension setting is made extremely weak, the machine may stop during sewing. This is not the sign of a malfunction. Increase the thread tension slightly, and begin sewing again.
- If necessary, refer to page 281 for reassembling the tension unit.

3

■ Upper thread is too tight

The tension of the upper thread is too tight, resulting in the bobbin thread being visible from the right side of the fabric.

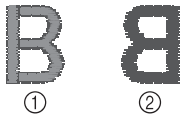

① Right side
② Wrong side

Turn the knob in the direction of the arrow to decrease the tension of the upper thread.

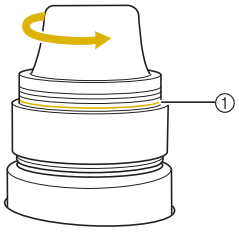

① Red line

If the red line is visible, the thread tension cannot be decreased any further. Increase the tension of the bobbin thread. For details, refer to page 122.

Note

- If you decrease the thread tension further than the red line, the tension knob may be disassembled.
- If necessary, refer to page 281 for reassembling the tension unit.

■ Upper thread is too loose

The tension of the upper thread is too loose, resulting in a loose upper thread, loose thread locks or loops appearing on the right side of the fabric.

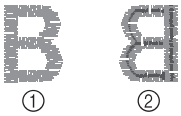

① Right side
② Wrong side

Turn the knob in the direction of the arrow to increase the tension of the bobbin thread.

4 EMBROIDERING SETTINGS

This chapter contains descriptions on the various embroidering settings, which make operation easier.

Basting Embroidery 126

Creating an Appliqué Piece 127

Creating an appliqué piece 127

Using a frame pattern for the outline 130

Selecting/Managing Thread Colors for Each Needle Bar (Manual Color Sequence) 132

Convenience of the manual color sequence 132

Specifying the manual color sequence 132

Using the manual color sequence 133

Precautions on the manual color sequence 133

Automatic Lock Stitch Setting 134

Starting/Ending Position Settings 135

Repeatedly sewing a pattern along a diagonal 136

Embroidering linked characters 137

Maximum Sewing Speed Setting 139

Setting the Machine to Stop at Color Changes 140

Stopping the machine at the next color change 140

Specifying pause locations before embroidering 140

Temporary Needle Bar Setting 142

Uninterrupted embroidering (monochrome) 143

Reserved Needle Bar and Sewing Speed Settings 145

Basting Embroidery

Before embroidering, basting stitches can be sewn along the outline of the pattern. This is useful for embroidering fabric that cannot have stabilizer material affixed with an iron or adhesive. By stitching stabilizer material to the fabric, shrinkage of the stitching or misaligned pattern can be minimized.

Note

- It is recommended to finish combining and editing the pattern before selecting the basting setting. If the pattern is edited after selecting the basting setting, the basting and pattern may become misaligned, and the basting under the pattern may be difficult to remove after embroidering is complete.

1 **Touch , and then display page 2/5 of the settings screen.**

2 **Use and to specify the distance from the pattern to the basting stitching.**

Memo

- The higher the setting, the farther the basting is from the pattern.
- The setting remains selected even if the machine is turned off.

3 **Touch CLOSE to return to the embroidering settings screen.**

4 **Touch to select the basting setting.**

Note

- When is pressed, the pattern is moved to the center. After selecting the basting setting, move the pattern to the desired position.

- To cancel the setting, touch .

▶ Basting is added to the beginning of the sewing order.

5 **Touch SEWING to continue to the embroidering screen.**

6 **Touch LOCK, and then press the start/stop button to begin embroidering.**

7 **When embroidering is finished, remove the basting stitching.**

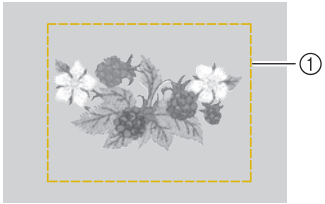

① Basting stitching

Creating an Appliqué Piece

Appliqué pieces can be created from the built-in patterns and patterns on embroidery cards. This is convenient for fabrics that cannot be embroidered or when you wish to attach an appliqué to a garment.

Creating an appliqué piece

The following pattern will be used to create an appliqué piece.

Note

- Felt or denim fabrics are recommended to make the appliqué piece. Depending on the pattern and fabric used, lighter weight fabrics may cause the stitching to appear smaller.
- For best results, be sure to use stabilizer material for embroidering.
- Select a frame that matches the pattern size. Frame options are displayed on the LCD screen.
- Finish combining and editing the pattern before selecting the appliqué setting. If the pattern is edited after selecting the appliqué setting, the appliqué stitching and pattern may become misaligned.
- Since an outline is added, the pattern for an appliqué piece (when the appliqué setting is selected) will be larger than the original pattern.
  First, adjust the size and position of the pattern as shown below.

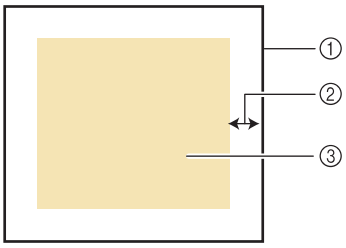

① Embroidering area
② Approx. 10 mm
③ Pattern size

1 **Touch [ ], and then display page 2/5 of the settings screen.**

2 **Use [−] and [+] to specify the distance between the pattern and the appliqué outline.**

Memo

- The setting remains selected even if the machine is turned off.

3 **Touch [CLOSE] to return to the embroidering settings screen.**

4 **Touch to select the appliqué setting.**

- To cancel the setting, touch .

▶ The steps for creating the appliqué piece are added to the sewing order.

Note

- When is touched, the pattern is moved to the center. After selecting the appliqué setting, move the pattern to the desired position.
- An appliqué piece cannot be created if the pattern is too large or too complicated or a combined pattern is separated. Even if the selected pattern fits within the embroidering area, the entire appliqué pattern may exceed the embroidering area when the outline is added. If an error message appears, select a different pattern or edit it.

5 **Touch SEWING to continue to the embroidering screen.**

Memo

- Three steps are added to the sewing order: appliqué cutting line, position of pattern placement on the garment, and appliqué stitching.

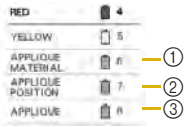

① Cutting line for appliqué
② Position of pattern placement on garment
③ Appliqué stitching

- We recommend using thread for the cutting line "APPLIQUE MATERIAL" that is closest to the color of the fabric.

6 **Fuse or stick a piece of stabilizer to the back of the felt or denim fabric to be used as the appliqué piece.**

7 **Hoop the appliqué fabric in the embroidery frame, attach the embroidery frame to the machine, and then start embroidering.**

8 **After the cutting line "APPLIQUE MATERIAL" is embroidered, stop the machine and remove the appliqué material from the embroidery frame.**

9 **Carefully cut along the stitching. After cutting, carefully remove all of the cutting line thread.**

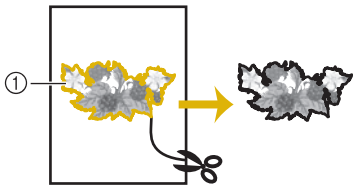

① Cutting line for appliqué

Note

- Depending on the pattern density and fabric used, there may be shrinking of the pattern or the appliqué may be misaligned with the placement line. We recommend cutting slightly outside of the cutting line.
- When using patterns that are vertically and horizontally symmetrical, use a chalk pencil to indicate the pattern orientation before cutting it out.
- Carefully cut out the pattern on the outline you just sewed. Do not cut inside the cutting line, otherwise the appliqué fabric will not be caught by the appliqué stitch.

10 **Use two layers of adhesive water-soluble stabilizer material with their sticky sides together, and then hoop them in the embroidery frame.**

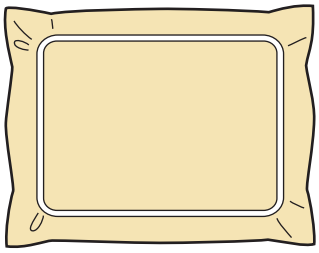

Note

- If water-soluble stabilizer is used, it is not necessary to remove the stabilizer material after sewing the appliqué outline. To reduce shrinkage of the pattern, we recommend using water-soluble stabilizer.
- Put together two layers of water-soluble stabilizer, otherwise the stabilizer material may tear during embroidering.

11 **Sew the placement line for the appliqué position "APPLIQUE POSITION".**

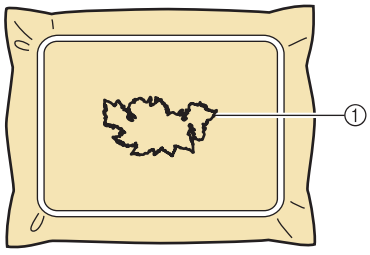

① Pattern placement line

12 **Lightly apply glue or spray adhesive, and paste the appliqué piece so that it aligns with the placement line.**

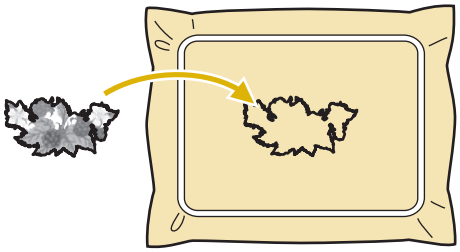

Note

- Before pasting the appliqué piece down, make sure the appliqué piece is positioned correctly within the placement line.

13 **Sew the outline "APPLIQUE".**

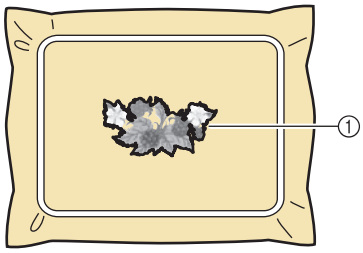

① Outline of appliqué piece

14 **After embroidering is finished, remove the stabilizer material from the embroidery frame.**

15 **Use scissors to cut the excess water-soluble stabilizer from outside the appliqué outline.**

16 **Soak the appliqué piece in water to dissolve the water-soluble stabilizer.**

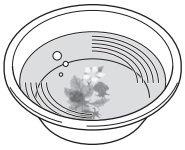

17 **Dry the appliqué piece, and then iron it if necessary.**

Note

- Do not apply a strong force when ironing, otherwise the stitching may be damaged.

Memo

- The outline is sewn using satin stitching.
- Some glue may get onto the presser foot, needle, and needle plate at this time. Finish embroidering the appliqué pattern, and then clean off the glue.

Using a frame pattern for the outline

Instead of having a multi-step appliqué created by following the embroidery image, you can create a shape to surround the embroidery image with a frame pattern. Once the multi-step appliqué is created to follow the frame pattern, you simply delete the frame pattern.

1 **After selecting and editing pattern in the pattern editing screen, perform the operations described in steps 1 through 2 of "Creating an appliqué piece" on page 127.**

2 **Touch CLOSE to return to the previous screen.**

3 **From the pattern type screen, select the desired frame shape and pattern, and add it to the appliqué pattern.**

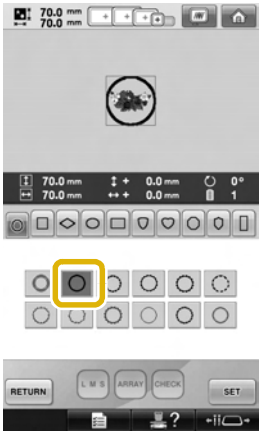

4 **Touch SET and then touch EDIT END.**

5 Touch to select the appliqué piece setting.

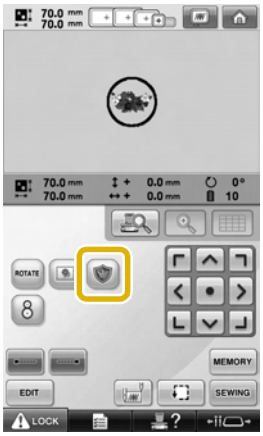

6 Touch EDIT .

7 Use SELECT to select the frame pattern, and then touch DELETE and OK .

▶ The frame pattern is deleted.

8 Touch EDIT END to continue to the embroidering settings screen.

9 Touch SEWING to continue to the embroidering screen.

10 Continue with step 6 of "Creating an appliqué piece" on page 128 to complete the appliqué piece.

4

Selecting/Managing Thread Colors for Each Needle Bar (Manual Color Sequence)

The thread colors assigned to each needle bar can be manually specified/managed.In addition, the thread colors can be assigned to needle bars automatically and more efficiently than when the settings are normally specified.

Convenience of the manual color sequence

The manual color sequence is convenient when the machine is being used under the following conditions.

■ **When using embroidery data that has no thread color information, such as with DST files**
The thread spools to be used can easily be selected for data with no thread color information. (For details on the thread color information for DST files, refer to "Colors of Tajima (.dst) embroidery data" on page 244.)

■ **When the same combination of thread colors is always used**
If specific thread colors are assigned to certain needle bars, the thread color settings can be changed with the needle bar number assignments, even when the pattern is changed. The operation is simplified if the same thread colors are always used.

■ **When continuously sewing with the same needle bar settings**
If the settings are specified normally, the needle bar settings are canceled when the embroidering settings screen appears after sewing stops. However, with the manual color sequence, the needle bar settings continue to be applied unless the pattern is deleted or the machine is turned off.
This is useful if the same pattern is to be sewn continuously multiple times.

Specifying the manual color sequence

Note

- The manual color sequence cannot be changed while operations are being performed in the embroidering screen.

1 **Touch [ ], and then display page 5/5 of the settings screen.**

2 **Touch [ON], and then select the manual color sequence.**

- When the embroidery machine is purchased, "OFF" is selected.

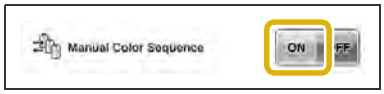

3 **Touch [CLOSE] to return to the previous screen.**

▶ The icon for the manual color sequence appears in the screen.

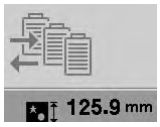

Using the manual color sequence

■ **Manually assign thread colors to all needle bars**
By specifying the thread colors used with this machine, sewing can continue more efficiently simply by changing the needle bar assignments after a pattern is selected. With the normal method of specifying settings, only a maximum of 9 needle bars can be manually assigned thread colors; however, with the manual color sequence, all 10 needle bars can be assigned thread colors.
(For details on specifying the settings, refer to "Reserved Needle Bar and Sewing Speed Settings" on page 145.)

■ **Needle bar number settings**
The needle bar used with each thread color can be specified.

Memo

- Using the procedure described in "Reserved Needle Bar and Sewing Speed Settings" on page 145, the finished embroidery colors can be checked in the screen if thread colors are assigned to thread spools.

1 In the embroidering settings screen, touch .

▶ A screen appears, allowing the needle bar numbers to be selected.

2 Touch and to select the thread color whose assigned needle bar is to be changed.

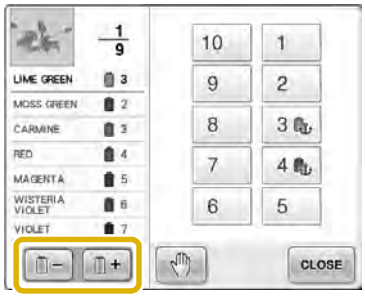

3 Touch a number button (between 1 and 10) to select the number of the needle bar whose settings are to be specified.

▶ The needle bar number for the thread color selected in step 2 changes to the selected needle bar number.
If the needle bar number was specified with reserved needle bar settings, the color of the thread spool on the left side changes to the specified thread color, and the pattern in the pattern display area also changes to the color of the specified needle bar.

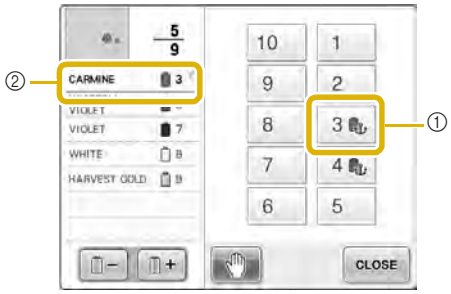

① Needle bar number specified with reserved needle bar settings
② Needle bar set to a different number (needle bar 5)

■ **Initializing thread color settings**
With the manual color sequence, the thread color information on the machine can be initialized each time a new pattern is selected, and then the needle bars can be assigned. This allows the needle bar settings to be specified without being affected by the thread color information from the previous pattern.

Precautions on the manual color sequence

■ **When embroidering a pattern containing 11 or more colors**
With the manual color sequence, the machine does not monitor the timing for replacing thread spools. Since the machine does not automatically stop and no message indicating that the thread spool be changed appears, as with the normal needle bar settings, follow the procedure described in either "Stopping the machine at the next color change" or "Specifying pause locations before embroidering" on page 140 to set the machine to stop with thread spools that must be changed.

Automatic Lock Stitch Setting

The machine can be set to automatically sew lock stitches, for example at the beginning of the pattern, before sewing each thread color change, and before trimming the thread.

When the embroidery machine is purchased, this function is set ON.

■ **Specifying that lock stitches be sewn at the beginning of the pattern, at the beginning of sewing each thread color change and at the beginning of sewing after the thread trim.**

1 **Touch so that it changes to .**
Touch (or) to select the desired setting.

- Each touch of the key turns the setting either on or off.

Automatic lock stitch setting turned on — Automatic lock stitch setting turned off

Memo

- If the first stitch length is less than 0.8 mm, the lock stitch won't be inserted.
- If "Thread Trimming" is set "OFF" in setting screen, the lock stitch won't be inserted (refer to page 223).

■ **Specifying that lock stitches be sewn before the thread is trimmed.**

1 **Touch so that it changes to .**
Touch (or) to select the desired setting.

- Each touch of the key turns the setting either on or off.

Automatic lock stitch setting turned on — Automatic lock stitch setting turned off

Memo

- The automatic lock stitch setting stays the same until the key is touched to turn it off. The setting specified before the machine is turned off remains selected the next time that the machine is turned on.
- If "Thread Trimming" is set "OFF" in setting screen, the lock stitch won't be inserted (refer to page 223).

Starting/Ending Position Settings

The machine can set the start point and the ending point separately from the 9 points of the pattern. Those are upper-left corner, upper-center, upper-right corner, center-left, center-center, center-right, lower-left corner, lower-center and lower-right corner.
These settings can be used to repeatedly sew a pattern along a diagonal.

The starting/ending position settings are specified from the embroidering settings screen.
When the embroidery machine is purchased, both the starting position and the ending positions are set to the center of the pattern.

1 **Touch** **.**

▶ The starting/ending position settings screen appears.

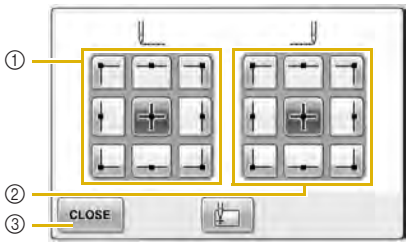

① Specifies the starting position
② Specifies the ending position
Touch a key to select the setting.
The highlighted key shows the currently selected setting.

Example

This key is selected.

③ Touch this key to close this screen.

■ **Specifying the starting position**

2 **Touch the key for the desired starting position setting.**

▶ When a starting position is selected, the ending position is automatically set to the same position.

▶ The embroidery frame moves to the starting position.

■ **Specifying the ending position**

3 **Touch the key for the desired ending position setting.**

4 **After selecting the desired settings, touch** **.**

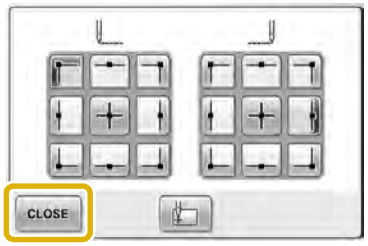

▶ The embroidering settings screen appears again.

Memo

- The starting/ending position settings do not change until the key for a new setting is touched. The settings specified before the machine is turned off remain selected the next time that the machine is turned on.

4

Repeatedly sewing a pattern along a diagonal

Example

1 Specify the upper-left corner as the starting position and the lower-right corner as the ending position.

Touch in the embroidering settings screen to display the starting/ending position settings screen.

For the starting position, touch so that it changes to .
For the ending position, touch so that it changes to .

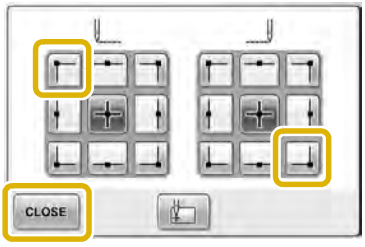

Touch CLOSE to close the starting/ending position settings screen.

2 Sew the first embroidery pattern.

Touch SEWING to display the embroidering screen, and then touch LOCK and press the start/stop button.

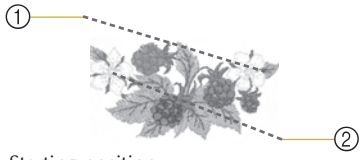

① Starting position
② Ending position

3 After embroidering is finished, the machine stops at the lower-right corner of the pattern.

4 Touch OK and repeat steps 2 and 3 three times.

Note

- If the next embroidery pattern of the series will be stitched outside the embroidery field, the following screen will appear. Rehoop the fabric to continue to repeat the sewing pattern. Touch CLOSE and repeat steps 2 and 3.

Memo

- If the starting position and ending position settings are changed, instead of sewing the patterns in a fixed direction, various pattern designs are possible.

Embroidering linked characters

Follow the procedure described below to embroider linked characters in a single row when the pattern extends beyond the embroidery frame.
Example: Linking "DEF" to the characters "ABC"

A B C D E F

1. **Select the character patterns for "ABC".**

2. **In the embroidering settings screen, touch** **.**

3. **Touch** **.**

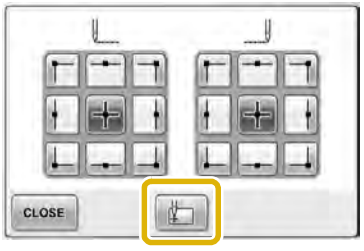

▶ The needle bar is positioned in the lower-left corner of the pattern. The embroidery frame moves so that the needle is positioned correctly.

Note

- To cancel the starting point setting and return the starting point to the center of the pattern, touch .
- Use to select a different starting point for embroidering.

4. **Touch** **to return to the embroidering settings screen, and then touch** **to continue to the embroidering screen.**

   ▶ changes to while the starting point is set in the lower-left corner of the pattern.

5. **Touch** **, and then press the start/stop button to begin embroidering.**

6. **After the characters are embroidered, cut the threads to a generous length, remove the embroidery frame, and then attach the embroidery frame again so that the remaining characters ("DEF") can be embroidered.**

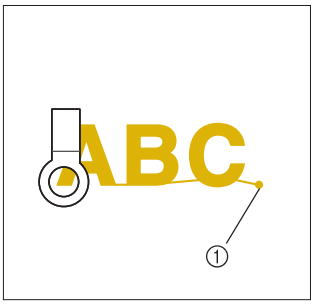

① End of the embroidering

7. **As in step 1, select the character patterns for "DEF".**

8 **In the embroidering settings screen, touch** .

9 **Touch** .

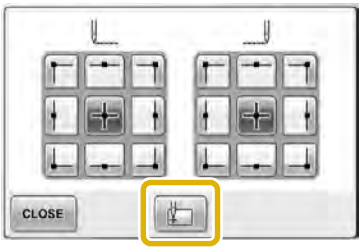

▶ The needle bar is positioned in the lower-left corner of the pattern. The embroidery frame moves so that the needle is positioned correctly.

10 **Touch** CLOSE .

11 **Use** **to align the needle with the end of embroidering for the previous pattern.**

- Touch to check the needle drop point on the LCD screen.
- Touch to zoom up the camera view twice the size of normal view.

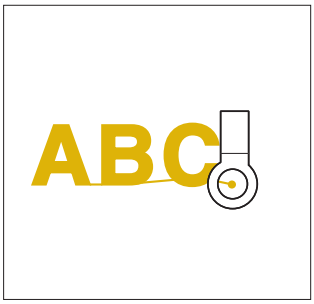

Note

- You can also follow the procedure found on page 100, “Finding the Sewing Position”, by placing the needle directly over the end of the previous pattern.

12 **Touch** SEWING .

13 **Touch** LOCK **, and then press the start/stop button to begin embroidering the remaining character patterns.**

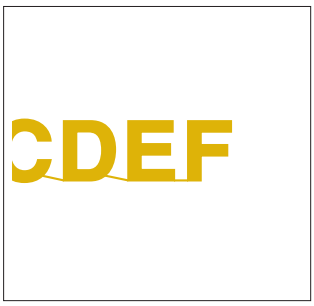

Maximum Sewing Speed Setting

The maximum sewing speed can be set to one of five levels at every 100 spm between 400 and 1000 spm. If the cap frame or the cylinder frame is used, the maximum sewing speed can be set to one of five levels at every 50 spm between 400 and 600 spm.

Maximum sewing speed

Embroidery frame/ Flat frame/ Round frame/ or other frames		Cap frame/ Cylinder frame	
1	1000	**1**	600
2	900	**2**	550
3	800	**3**	500
4	700	**4**	450
5	600	**5**	400
6	500	**–**	–
7	400	**–**	–

The maximum sewing speed setting is specified from the embroidering screen.
When the embroidery machine is purchased, the maximum sewing speed is set to 1000 spm (Cap frame or cylinder frame for 400 spm).

The cap frame, cylinder frame, round frame and flat frame are not included accessories; however, they are available as an option.

1 **To increase the sewing speed, touch [+].**
To decrease the sewing speed, touch [–].

▶ The value beside [–] and [+] changes.

Memo

- You can also specify a maximum sewing speed to a certain needle bar in the reserved needle bar settings (refer to page 146). When you set the slower sewing speed to a certain needle bar, the sewing speed set with the procedure described in this page, will not change the sewing speed on the balance of the needles. It changes the speed of the reserved needle.
- Decrease the sewing speed when embroidering on thin, thick or heavy fabrics. In addition, the machine embroiders more quietly at a slower sewing speed.
- The sewing speed can be changed while embroidery is being sewn.
- The maximum sewing speed setting does not change until a new setting is selected. The setting specified before the machine is turned off remains selected the next time that the machine is turned on.
- Decrease the sewing speed to 400 spm, when using a weak thread like a metallic thread.

Setting the Machine to Stop at Color Changes

The machine can be stopped at any time; however, if the machine is stopped while it is embroidering, it is better to go back a few stitches before continuing sewing to overlap the stitching. If the machine stops at a color change, it is not necessary to go back through the stitching before continuing embroidering.

Stopping the machine at the next color change

The machine can be set to stop before sewing the next color.

1 While sewing the color before the point where you wish to stop the machine, touch RESERVE STOP so that it changes to RESERVE STOP.

2 After finishing sewing the area for the current color, the next needle bar moves into position and the machine stops before sewing the next color.

▶ RESERVE STOP changes back to RESERVE STOP.

- If the machine is temporarily turned off, you will be asked if you wish to continue sewing or select a new pattern when the machine is turned on again.
  Touch OK to continue embroidering.
  (Refer to “Resume Embroidering After Turning Off the Machine” on page 120.)

Specifying pause locations before embroidering

Pause locations can be specified in the change thread color screen, displayed by touching .

1 Touch in the pattern editing screen.

▶ The change thread color screen appears.

2 Touch and so that the color at the top of the thread color sequence display is the color where you wish to stop the machine before sewing it.

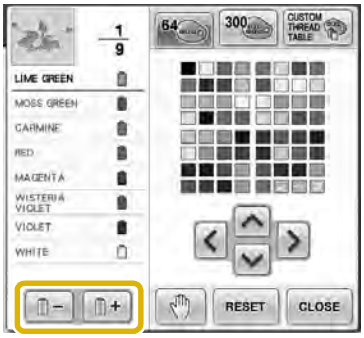

3 **Touch** .

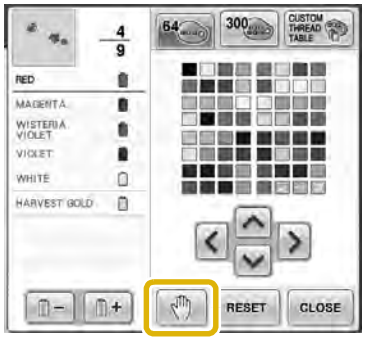

▶ The mark appears to indicate where the machine will stop.

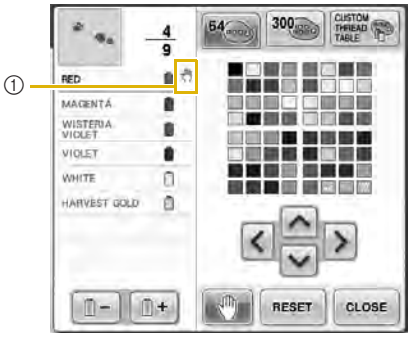

① mark

4 **Repeat steps ❷ and ❸ for each pause that you wish to specify.**

- Any number of pauses can be specified.

5 **After specifying the desired settings, touch** CLOSE .

- If the machine is temporarily turned off when it is stopped at the specified location after embroidering, you will be asked if you wish to continue sewing or select a new pattern when the machine is turned on again.

  Touch OK to continue embroidering. (Refer to "Resume Embroidering After Turning Off the Machine" on page 120.)

Memo

- If the machine is temporarily turned off, the settings to stop the machine at color changes specified before the machine was turned off are not cancelled. However, the settings are cancelled if a new pattern is selected.
- If a pattern with the settings to stop the machine at color changes is saved, the settings to stop the machine at color changes are also saved.

4

Temporary Needle Bar Setting

After embroidering begins, the machine can be stopped at a color change and a different needle bar can be specified for the next color to be sewn.
By substituting an upper thread color already threaded on a different needle bar, the time for sewing can be saved. For example, similar color thread can be substituted for temporary use.

1 **While sewing the color before the one that you wish to change, touch RESERVE STOP so that it changes to RESERVE STOP.**

▶ After the color currently being sewn is finished, the threads are trimmed and the machine stops.

- The start/stop button can be pressed at the color change to stop the machine, but, in that case, stop the machine after the threads are trimmed.

2 **Touch .**

▶ The temporary needle bar setting screen appears.

3 **Touch the key for the needle bar threaded with the thread that you wish to embroider with.**

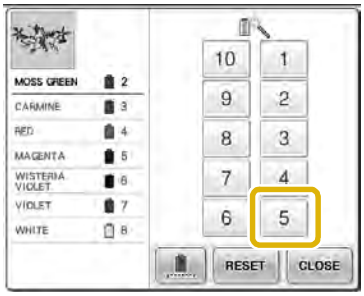

▶ To cancel the setting, touch RESET.

4 **Touch CLOSE.**

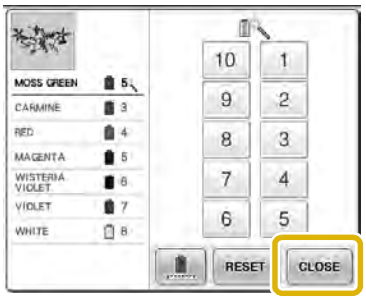

▶ The embroidering screen appears again.

5 **Touch LOCK, and then press the start/stop button to begin embroidering.**

① The needle bar number changes and appears to indicate the selected needle bar.

▶ Embroidering continues with the specified needle bar.

Memo

- Temporary needle bar setting only applies until the next color change. If the pattern contains another area with the same color or when the same pattern is sewn the next time, the area is sewn with the original color.
- The thread color (needle bar) can be changed with this procedure even when the machine has been stopped with a specified pause or at the time of spool change.
- If the start/stop button was pressed to stop the machine while an area was being sewn, a temporary needle bar setting cannot be applied. The thread color (needle bar) cannot be changed in the middle of an area that is being sewn.

Uninterrupted embroidering (monochrome)

A selected pattern can be stitched out in one color instead of multicolor. The machine will hesitate but not stop between color steps, and then continue till the pattern is completed.

1 **Touch the key for the needle bar threaded with the thread you wish to embroider uninterruptedly.**

2 **Touch .**

▶ The temporary needle bar setting screen appears.

4

3 **Touch for the multicolor steps to become shaded and the selected pattern will embroider in a single color, instead of changing the thread while embroidering.**

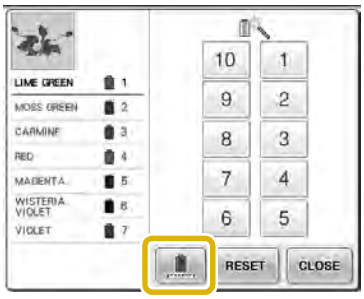

▶ The thread color displayed on the screen will be grayed out.

Memo

- If you touch any key of the needle bar number above, the temporary needle bar setting will be activated. (Refer to page 142.)

- Touch again to return to the pattern's original settings.

4 **Touch CLOSE.**

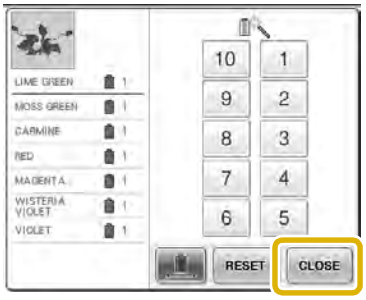

Memo

- Even if uninterrupted embroidering has been set, the DST thread trimming function can be used (refer to page 223).
- You can select the needle bar on the embroidering screen, even after touching CLOSE in step 4.
- After finishing the embroidery, uninterrupted embroidery will be canceled.

Reserved Needle Bar and Sewing Speed Settings

Normally, the machine automatically assigns thread colors to the needle bars; however, a specific thread color can be manually assigned to a certain needle bar. If a needle bar is specified, that needle bar is removed from the machine's automatic assignments and the specified color remains assigned to it.
By specifically assigning often used thread colors to certain needle bars, the trouble of changing the thread spools can be reduced.
Also, the maximum sewing speed can be specified to the assigned needle bar. It is useful when you specially set a weak thread such as a metallic thread to the assigned needle bar.

Note

- This feature is not accessible through the embroidering screen.
- You can assign thread colors up to 9 needle bars in normal mode. When you set "Manual Color Sequence" to "ON" in settings screen, it is available to assign up to 10 needle bars. If you assign all the 10 needle bars in the "Manual color sequence" mode, and then you set the machine to the normal mode, the setting of needle bar 10 is canceled automatically.

Refer to "Selecting/Managing Thread Colors for Each Needle Bar (Manual Color Sequence)" on page 132

Once a manual needle bar setting is specified, it remains applied until the setting is cancelled.
The manual needle bar settings can be specified in page 3/5 of the settings screen.

1 Touch , and then touch and to display page 3/5 of the settings screen.

2 Touch any of the key from 1 to 10 for the number of the needle bar that you wish to specify.

① Indicates the number of the selected needle bar

3 **Select the color to be assigned to the needle bar.**

Touch ⌃, ‹, › and ⌄ until the color that you wish to select from the thread table appears enlarged.

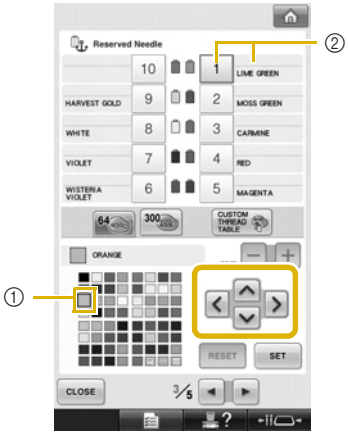

① The color that appears enlarged is the color that is selected.
② Displays the color that is selected and its name

▶ Highlighting a color square moves in the direction of the arrow on the key that is touched.

4 **Touch SET.**

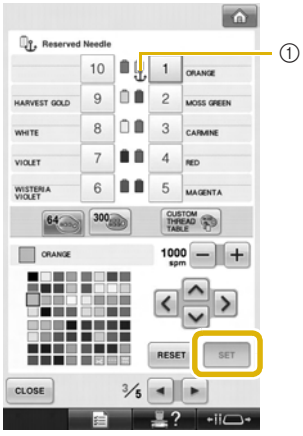

▶ The color selected in step 3 is specified.
① The selected color of thread and the anchor appear on the spool.

5 **Touch − or + to set the maximum sewing speed for the assigned needle bar.**

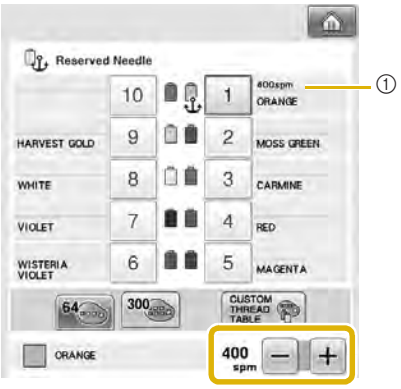

① Value of maximum sewing speed setting

Memo

- Decrease the sewing speed to 400 spm, when you specially set a specialty thread such as a metallic thread to the assigned needle bar.
- The maximum sewing speed specified here is always effective to the assigned needle bar, even if you set the faster speed in the embroidering screen (refer to page 139).

6 **Touch CLOSE.**

- Specified needle bar is indicated with anchor mark and the specified maximum sewing speed in the embroidering screen.

■ **Cancelling the setting**

To change the setting, first cancel it, and then select the new setting.

1 **Touch any of the key from 1 to 10 for the number of the needle bar whose setting you wish to cancel.**

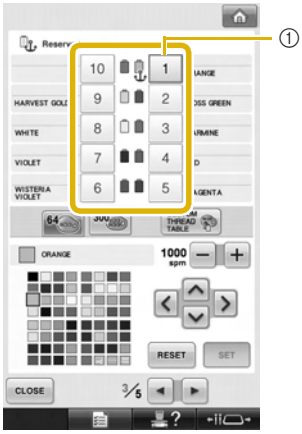

① Indicates the number of the selected needle bar

2 **Touch RESET.**

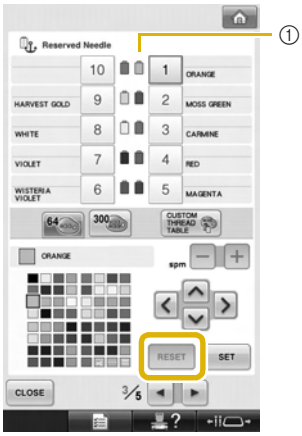

① The anchor disappears from the thread spool.

▶ This cancels the manual needle bar setting.

Memo

- Follow the procedure from step 3 on page 146, to assign the other thread color to the needle bar you canceled the setting.

5

SELECTING/EDITING/SAVING PATTERNS

This chapter provides details on selecting, editing and saving embroidery patterns.

Precautions 150
Concerning embroidery data 150
Concerning optional embroidery cards .. 152
Concerning USB media 152
Selecting an Embroidery Pattern 153
General pattern selection 153
Embroidery patterns 154
Frame patterns 154
Monogram and frame designs 155
Alphabet patterns 159
Floral alphabet patterns 162
Greek alphabet patterns 163
Embroidery patterns stored in the machine memory 163
Embroidery cards (optional) 164
Computer (USB) 166
Connecting the USB using the included USB cord clamps 170
USB media 172
Sending Embroidery Patterns From a Computer to the Machine (Link Function) 174
Operations available with the Link function 174
Embroidering using the Link function 175
Disabling the Link function 178
Editing the Embroidery Pattern (Pattern Editing Screen) 179
Enlarge the pattern image on the screen ... 179
Combining patterns 179
Selecting the pattern to be edited .. 180
Moving a pattern 181
Flipping a pattern horizontally 182
Changing the size of a pattern 182
Rotating a pattern 183
Changing the text arrangement of a character 184
Changing the character spacing 185
Separating combined character patterns 186
Trimming the threads between characters 187
Changing the thread density (only for selected character and frame patterns) ... 187
Specifying multi-color text 188
Changing the colors of the pattern 188
Designing repeated patterns 190
Creating a custom thread table 198
Choosing a color from the custom thread table 200
Duplicating a pattern 201
Editing patterns as a group 202
Deleting a pattern 202
Editing the Embroidery Pattern (Embroidering Settings Screen) 203
Rotating the entire pattern 203
Editing a Combined Pattern 204
Saving Embroidery Patterns 209
Machine's memory 209
If the embroidery pattern cannot be saved 209
USB media 211
Computer (USB) 212

Precautions

Concerning embroidery data

Observe the following precautions when using embroidery data other than that created and saved in this machine.

CAUTION

- **While using embroidery data other than our original patterns, the thread or needle may break when sewing with a stitch density that is too fine or when sewing three or more overlapping stitches. In that case, use one of our original data design systems to edit the embroidery data.**

■ Types of embroidery data that can be used

- Only .pes, .phc and .dst embroidery data files can be used with this machine. Using pattern data other than those saved using our data design systems or sewing machines may cause this embroidery machine to malfunction.

■ Types of USB Devices/Media that can be Used (through USB Type "A" (host) connector)

Stitch data can be saved to or recalled from USB media. Use media that meets the following specifications.

- USB Floppy disk drive
- USB Flash drive (USB Flash memory)
- USB CD-ROM, CD-R, CD-RW drives (recalling only)

Memo

- Stitch/embroidery data cannot be saved using a USB CD-ROM, CD-R or CD-RW drive.
- USB devices/media can be used only through the primary (top) USB port for media or the USB port for mouse. USB port for computer is only for a computer connection.

You can also use the following types of media with the USB Memory Card Reader/Writer.

- Secure Digital (SD) Card
- CompactFlash
- Memory Stick
- SmartMedia
- MultiMediaCard (MMC)
- xD-Picture Card

Note

- Some USB media may not be usable with this machine. Please visit our website "www.babylock.com" for more details.
- USB hubs cannot be used through the primary (top) USB port for media or the USB port for mouse. The machine will not recognize the above USB devices or USB memory cards through a USB hub.
- The access lamp will begin blinking after inserting USB Devices/Media, and it will take about 5 to 6 seconds to recognize the Devices/Media. (Time will differ depending on the USB Device/Media.)
- Do not unplug a USB device/media from this machine immediately after it has been plugged in. Be sure to wait at least 5 seconds before unplugging the USB device/media.
- For additional information, refer to the instruction manual included with the USB media that you have purchased.

Memo

- When a file folder is necessary to create, use a computer.
- Letters and numerals can be used in the file names. In addition, if the file name contains no more than eight characters, the entire file name will appear on the screen.
  If the file name is more than eight characters long, only the first six characters followed by "~" and a number appear as the file name.

■ Computers and Operating Systems with the Following Specifications can be Used

- Compatible models:
  IBM PC with a USB port as standard equipment
  IBM PC-compatible computer equipped with a USB port as standard equipment
- Compatible operating systems:
  Microsoft Windows 2000/XP, Windows Vista, Windows 7

■ Precautions on using the computer to create data

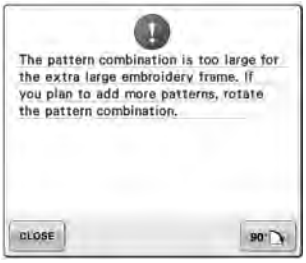

- If the name of embroidery data file/folder cannot be identified, for example, because the name contains special characters or symbols, the file/folder is not displayed. If this occurs, change the name of the file/folder. We recommend using the 26 letters of the alphabet (uppercase and lowercase), the numbers 0 through 9, the dash "-", and the underline "_". Do not use comma "," or period "." in the file name.
- If embroidery data larger than 200 mm (H) × 360 mm (W) (approx. 7-7/8 inches (H) × 14 inches (W)) is selected, a message is shown at the right asking if you wish to rotate the pattern 90 degrees.
  Even after being rotated 90 degrees, embroidery data larger than 200 mm (H) × 360 mm (W) (approx. 7-7/8 inches (H) × 14 inches (W)) cannot be used. (All designs must be within the 200 mm(H) × 360 mm(W) (approx. 7-7/8 inches (H) × 14 inches (W)) design field size.)
  For more details, refer to page 166.
- .pes files saved with the number of stitches or the number of colors exceeding the specified limits cannot be displayed. The combined design can not exceed a maximum number of 500,000 stitches or a maximum number of 125 color changes (Above numbers are approximate, depending on the overall size of the design). Use one of our design software programs to edit the embroidery pattern so that it meets these specifications.
- Do not create folders in "Removable disk" on a computer. If embroidery data is stored in a folder in "Removable disk," that embroidery data cannot be retrieved by the machine.

■ Tajima (.dst) embroidery data

- .dst data is displayed in the pattern list screen by their file names. (The actual image cannot be displayed.) Only the first eight characters of the file name can be displayed.
- Since Tajima (.dst) data does not contain specific thread color information, it is displayed with our default thread color sequence. Check the preview and change the thread colors as desired. For more details, refer to page 244.
- You cannot select .dst data to send from a computer using the Link function. (Refer to the "Sending Embroidery Patterns From a Computer to the Machine (Link Function)" on page 174.

Concerning optional embroidery cards

- Do not disassemble or alter the embroidery cards.
- Do not forcefully bend, drop, scratch or place heavy objects on top of the embroidery cards.
- Do not allow the embroidery cards to become wet, such as with water, solvents, drinks or any other liquids.
- Do not use or store the embroidery cards in a location exposed to strong static electricity or electrical interference.
- Do not use or store embroidery cards in locations exposed to vibrations or impacts, direct sunlight, extreme dust (or lint), high temperatures, high humidity, severe temperature fluctuations, or strong magnetic forces (such as from speakers).
- To use optional embroidery cards to recall embroidery patterns, connect the embroidery card reader/USB card writer module* to this machine.
- Store embroidery cards in their protective cases.
- If an embroidery card other than our original embroidery cards are used, the embroidery machine may not operate correctly. Be sure to use only recommended embroidery cards.
- Some licensed or copyright embroidery cards cannot be used with this embroidery machine.
- Embroidery cards sold overseas cannot be used with this embroidery machine.
- Only insert or remove embroidery cards while an access lamp on the embroidery card reader/USB card writer module* is not flashing, or while the embroidery machine is turned off (refer to page 164).

* If you have purchased the Palette Ver5 or later, Palette Petite or Palette PTS, you can plug the included USB card writer module into the machine as an embroidery card reader, and recall patterns.

Concerning USB media

- Do not disassemble or alter the USB media.
- Do not allow the USB media to become wet, such as with water, solvents, drinks or any other liquids.
- Do not use or store the USB media in a location exposed to strong static electricity or electrical interference.
- Do not use or store USB media in locations exposed to vibrations or impacts, direct sunlight, extreme dust (or lint), high temperatures, high humidity, severe temperature fluctuations, or strong magnetic forces (such as from speakers).
- While embroidery data is being recalled from the USB media, do not allow the machine to be exposed to vibrations or impacts, and do not attempt to remove the USB media from the machine.
- Some USB media may not be usable with this machine. Please visit our web site “www.babylock.com” for more details.
- Only remove USB media while an access lamp on the USB media is not flashing (refer to page 172).
- For additional information, refer to the instruction manual included with the USB media that you have purchased.
- Do not unplug a USB device/media from this machine immediately after it has been plugged in. Be sure to wait at least 5 seconds before unplugging the USB device/media.

Selecting an Embroidery Pattern

Various embroidery patterns are built into this machine. Other than the built-in patterns, various other patterns can be selected from embroidery cards (optional) and from the computer.

Memo

- Refer to page 164 about recalling the embroidery pattern from the embroidery cards (optional).

General pattern selection

The procedure for selecting a pattern differs depending on the type of pattern; however, the general procedure for selecting a pattern is described below.

1 In the pattern type selection screen, touch the key for the desired category.

■ **Pattern type selection screen**

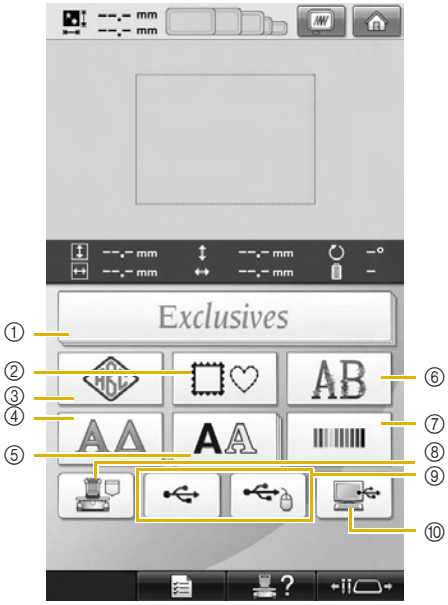

① Embroidery patterns
② Frame patterns
③ Monogram and frame pattern
④ Greek alphabet patterns
⑤ Alphabet patterns
⑥ Floral alphabet patterns
⑦ Common design patterns
⑧ Embroidery patterns stored in the machine's memory
⑨ USB media
⑩ Computer (USB)

2 In the pattern list screen, which appears next, touch the desired pattern to select it.

■ **Pattern list screen**

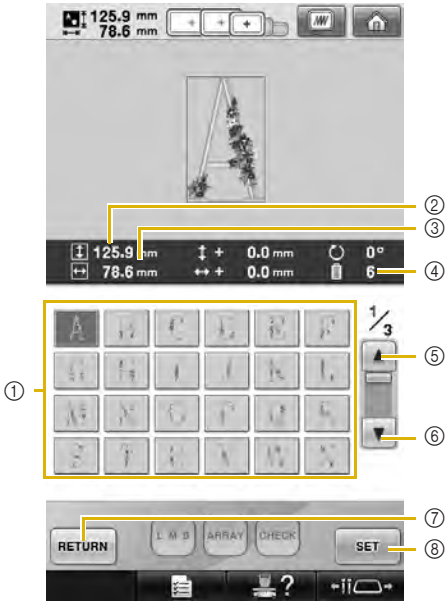

① Pattern keys
Touch a pattern to display the following information of the pattern.
② Vertical length of the pattern
③ Horizontal width of the pattern
④ Number of thread color changes
⑤, ⑥ If there is more than one page, touch ▲ or ▼ until the desired page is displayed.
⑦ Touch RETURN to return to pattern type selection screen to change category.
⑧ Touch to confirm the pattern, and move to the pattern editing screen.

- After selecting the pattern, touch SET .

5

Embroidery patterns

1 **Touch** Exclusives.

▶ The embroidery pattern categories appears.

- If the category that was selected appears as multiple stacked keys, a sub-category can be selected. Touch the key for the sub-category containing the desired pattern.

2 **Select an embroidery pattern category.**
Touch the desired pattern.

▶ The list of embroidery patterns appears.

3 **Select an embroidery pattern.**
Touch the desired pattern.

▶ The selected pattern appears in the pattern display area.

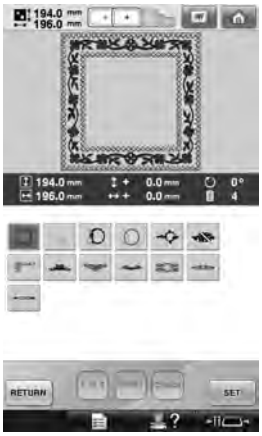

- If the wrong pattern was selected or you wish to select a different pattern, touch the desired pattern.

4 **Touch** SET.

This confirms the pattern selection.

▶ The pattern editing screen appears.

Frame patterns

1 **Touch** .

▶ The list of frame patterns appears.

2 **From the upper tabs of the screen, select the desired shape for the frame.**
Touch the desired frame shape.

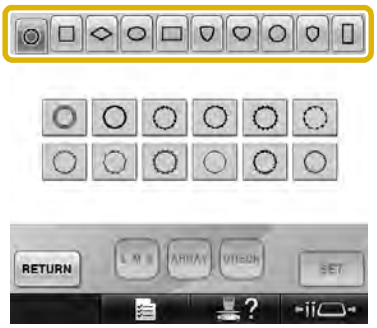

▶ The available frame patterns appear in the lower half of the screen.

3 **Select a frame pattern.**
Touch the desired pattern.

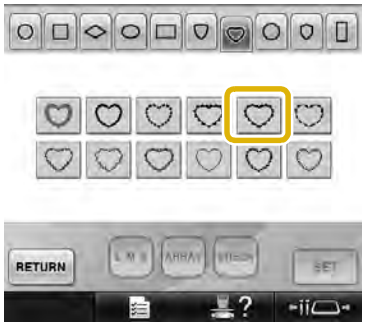

▶ The selected pattern appears in the pattern display area.

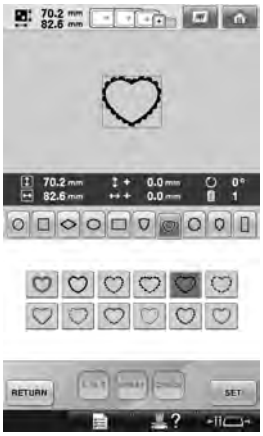

- If the wrong pattern was selected or you wish to select a different pattern, touch the desired pattern.

4 **Touch** SET.

This confirms the pattern selection.

▶ The pattern editing screen appears.

Monogram and frame designs

Monogram designs can be created by combining two or three letters. Frame patterns are also available for these types of designs.

1 **Touch** .

▶ The design selection screen appears.

2 **Select the monogram design.**
Touch the button for the desired character style.

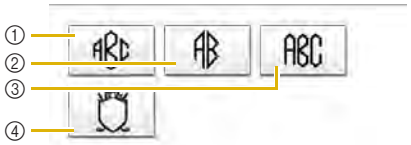

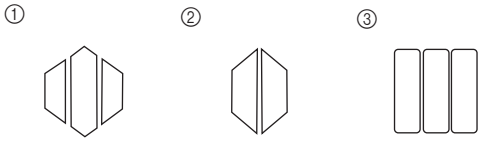

▶ The text input screen appears.

- If ④ is selected, the frame pattern list appears. When creating a pattern by combining letters with a frame, it does not matter which of the two, the letters or the frame, is selected first. The sewing order follows the order in which the parts of the monogram are selected. For this example, we will select the letters first.

3 **Select the characters.**
Touch the tabs to select different character shapes, and then touch the key for one letter on each tab.

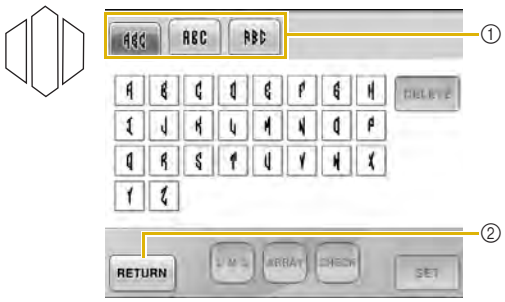

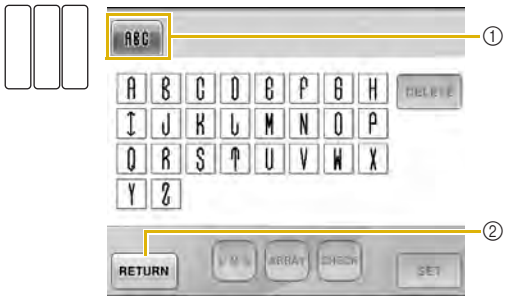

* Since the shapes of the letters are the same with this design, there are no tabs to select. On this screen, select three letters.

① Tabs
② To change the character font, touch RETURN to return to the design selection screen.

▶ The selected characters appear in the pattern display area.

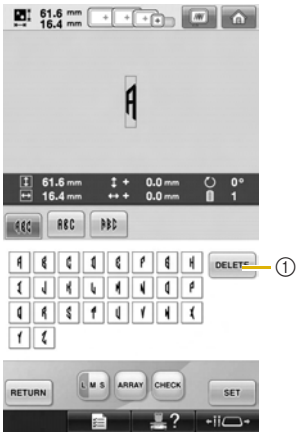

① If the wrong character was selected or you wish to select a different character, touch DELETE to delete the last character selected, and then touch the desired character.

Memo

- Depending on the design, there is a preset number of letters; however, more than the preset number of letters can be entered. If too many letters are selected, touch DELETE to delete the letters.
- If desired, multiple letters can be selected to use these characters in the same way as any other alphabet pattern without creating a monogram.

4 **With one character entered, if necessary, change the size of the character.**

① Touch to change the size.

■ **Changing the size**

After selecting the first character, touch until the character is the desired size.

- The next character that is selected will have the new character size.
- The character size of all entered characters cannot be changed after the characters are combined. (The size of the entire pattern can be changed from the pattern editing screen.)

5 **Touch** .

This confirms the character selection.

▶ The pattern editing screen appears.

Next, we will combine the letters with a frame.

6 **Touch** .

▶ The pattern type selection screen appears.

7 **Touch** .

▶ The design selection screen appears.

8 **Touch** .

▶ The list of frame patterns appears.

9 **Select a pattern.**

Touch the desired pattern.

▶ The selected frame pattern appears in the pattern display area.

5

- If the wrong pattern was selected or you wish to select a different pattern, touch the desired frame pattern.

10 **If the character size was changed, change frame pattern to the same size.**

Touch [L M S] to change the pattern to the same size as the letters.

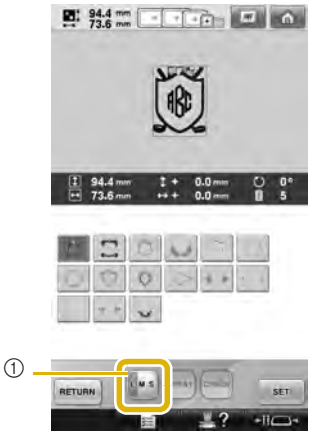

① Touch this key to change the size.

11 **Touch [SET].**

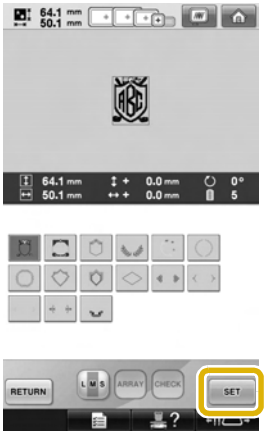

This confirms the frame selection.

▶ The pattern editing screen appears.

- Touch [ ] to group this combined pattern. (Refer to "Editing patterns as a group" on page 202.)

Memo

- Due to size or shape, some frame patterns cannot be used with the [ ] design.
- The frame patterns are just some of the patterns that can be used. Character patterns other than the 3-letter monogram patterns can be used in the combination.

Alphabet patterns

There are 28 built-in character fonts.

Example: Entering “Lucky Color”.

1 **Touch AA.**

▶ The font selection screen appears.

2 **Select a character font.**

Touch the desired character font.

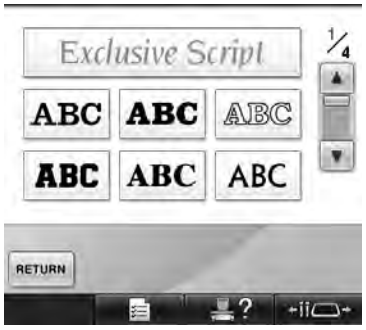

- Touch ▲ or ▼ for additional selections.

▶ The text input screen appears.

3 **If the key for the character that you wish to select is not displayed, touch the tab for the desired set of characters.**

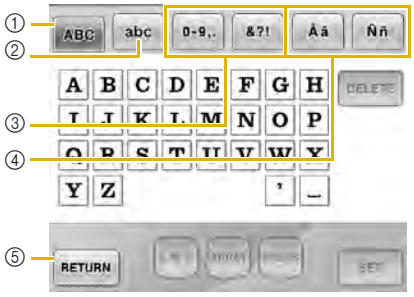

① Uppercase letters
② Lowercase letters
③ Numbers/symbols
④ Accented characters
⑤ Touch this key to change the character font.

▶ The text input screen for the characters shown on the tab appears.

- To change the character font, touch RETURN to return to the font selection screen.

4 **Enter “L”.**

5

5 **With the first character entered, touch [L M S] to change the size of the character.**

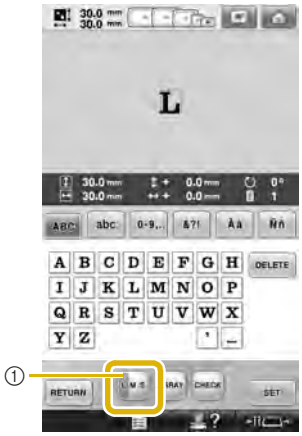

① Touch this key to change the size.

- The next characters that are selected will have the new character size.
- The character size of all entered characters cannot be changed after the characters are combined. (The size of the entire pattern can be changed from the pattern editing screen.)

Note

- Size of the two small fonts [ABCDE] and [ABCDE] cannot be changed. Both of these smaller fonts are shown on page 4/4 of the font selection screen.

6 **Touch [abc] and enter "ucky".**

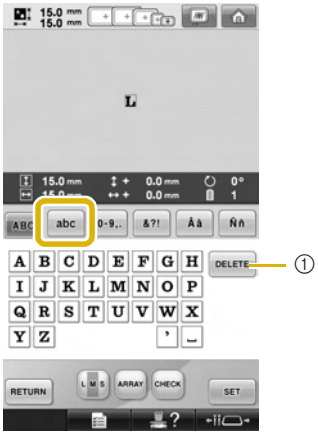

① If the wrong character was selected or you wish to select a different character, touch [DELETE] to delete the last character selected, and then touch the key for the desired character. Each touch of [DELETE] deletes the last character of the text.

7 **Touch [␣] to enter a space.**

8 Touch ABC and enter “C”.

9 Touch abc and enter “olor”.

10 If the text is small and difficult to read on the screen, touch CHECK to check the text.

11 After checking the text, touch CLOSE to return to the text input screen.

12 After entering all of the text as desired, touch SET.

This confirms the pattern selection.

▶ The pattern editing screen appears.

5

■ Changing the text arrangement

Touch ARRAY to display the screen shown below. Touch the key for the desired text arrangement. After selecting the desired text arrangement, touch CLOSE to return to the text input screen.

	Arranges the text on a straight line.
	Arranges the text on the outside of a wide curve.
	Arranges the text on the inside of a wide curve.
	Arranges the text on a slanted line.
	Arranges the text on the outside of a sharp curve.
	Arranges the text on the inside of a sharp curve.
	If text is arranged on a curve, each touch of this key decreases the bend of the curve (makes it flatter).
	If text is arranged on a curve, each touch of this key increases the bend of the curve (makes it more curved).

- If the text is arranged using one of the text arrangements on this screen, even more characters can be entered.

Memo

- The color of the text is set to black. To change the color, refer to “Specifying multi-color text” on page 188 and “Changing the colors of the pattern” on page 188.

Floral alphabet patterns

1 **Touch** AB.

▶ The list of floral alphabet patterns appears.

2 **Select an embroidery pattern.**
Touch the desired pattern.

▶ The selected pattern appears in the pattern display area.

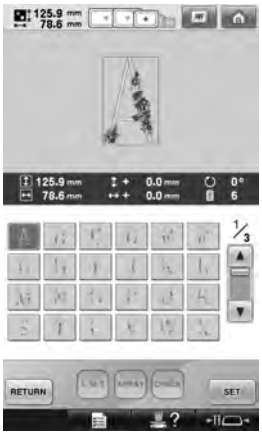

- If the wrong pattern was selected or you wish to select a different pattern, touch the desired pattern.

3 **Touch** SET.

This confirms the pattern selection.

▶ The pattern editing screen appears.

Greek alphabet patterns

1 **Touch** ΑΔ.

▶ The list of Greek alphabet patterns appears.

2 **Select a character pattern.**
Touch the desired character pattern.

▶ The selected pattern appears in the pattern display area.

- If the wrong pattern was selected or you wish to select a different pattern, touch the desired pattern.

3 **Touch** SET.

This confirms the pattern selection.

▶ The pattern editing screen appears.

Embroidery patterns stored in the machine memory

Embroidery patterns stored in the machine memory can be recalled. For details on storing a pattern, refer to “Saving Embroidery Patterns” on page 209.

1 **Touch** .

▶ The list of patterns appears.

5

2 **Select an embroidery pattern.**
Touch the desired pattern.

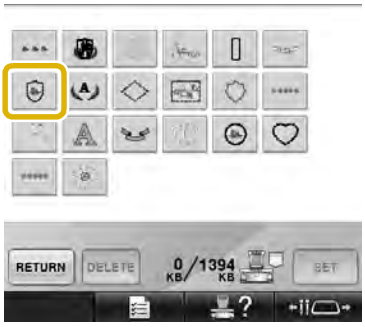

▶ The selected pattern appears in the pattern display area.

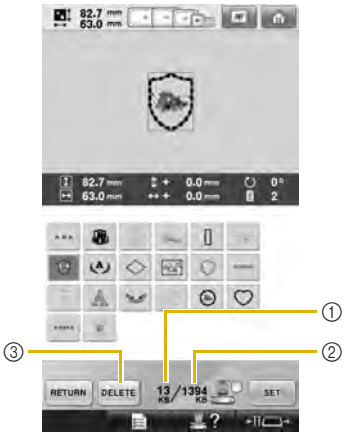

① Shows the amount of memory used by selected pattern.
② Shows the amount of free space in the machine's memory.
③ Touch this key to delete the selected pattern from the memory.

- If the wrong pattern was selected or you wish to select a different pattern, touch the key for the desired pattern.

■ **Deleting embroidery data**
From this screen, the embroidery data stored in the machine's memory can be organized by deleting unnecessary data.
After selecting the pattern that you wish to delete, touch DELETE to display the screen shown below.

① Permanently deletes the data from the machine's memory, then returns to the data with no pattern selected.
② Does not delete the data, then returns to the screen before DELETE was touched.

3 **Touch SET.**
This confirms the pattern selection.

▶ The pattern editing screen appears.

Embroidery cards (optional)

■ **About embroidery cards (optional)**

- Use only embroidery cards manufactured for this machine. Using unauthorized cards may cause your machine to operate incorrectly.
- Embroidery cards sold in foreign countries cannot be used with this machine.
- Store embroidery cards in the hard case.

■ **About embroidery card reader (optional) and USB card writer module***

- Use only an embroidery card Reader designed for this machine. Using an unauthorized embroidery card Reader may cause your machine to operate incorrectly.

Note

- Embroidery patterns cannot be saved from the machine to an embroidery card inserted into a connected USB card writer module*.

* If you have purchased the Palette Ver5 or later, Palette petite or Palette PTS, you can plug the included USB card writer module into the machine as an embroidery card reader, and recall patterns.

■ **Using embroidery card reader**

When using the embroidery card reader, carefully support the embroidery card reader near the operation panel.

1 Plug the optional embroidery card reader/USB card writer module* into the primary (top) USB port on the machine.

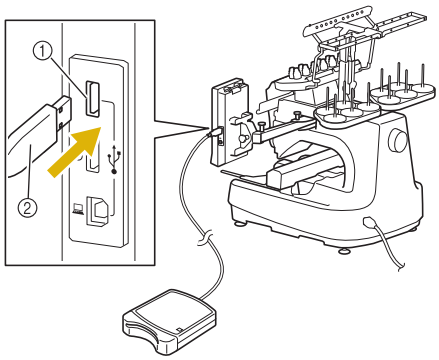

① Primary (top) USB port
② Embroidery card reader/USB card writer module*

* If you have purchased the Palette Ver5 or later, Palette petite or Palette PTS, you can plug the included USB card writer module into the machine as an embroidery card reader, and recall patterns.

When connecting the USB card reader/writer to the machine's USB port, be sure to secure the cable with the two hooks on the back panel. If the cable is not secured, the embroidery frame may catch on the cable while the frame is moving, causing the pattern to become misaligned.

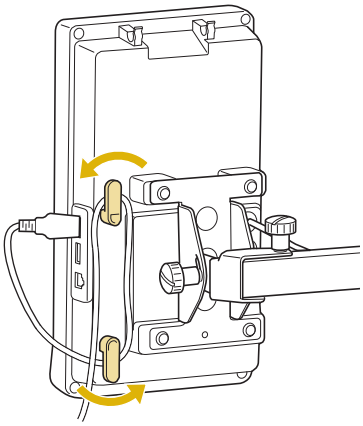

2 Insert the card completely into the card reader/USB card writer module*.

- Insert the embroidery card so that the end with a printed arrow is facing up.

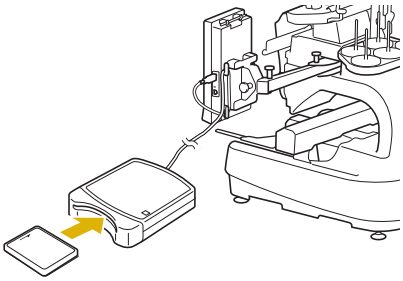

Note

- Two embroidery USB card readers/USB card writer module* cannot be used with this machine at the same time. If two embroidery USB card readers/USB card writer module* are inserted, only the embroidery USB card reader/USB card writer module* inserted first is detected.
- If an embroidery card other than our original embroidery cards are used, the embroidery machine may not operate correctly. Be sure to use only recommended embroidery cards.
- Some licensed or copyright cards may not be compatible with this embroidery machine.

Memo

- You can also plug the embroidery card reader/USB card writer module* into the center port of the machine.

3 Touch the key of the USB port that the embroidery card reader/USB card writer module* is plugged into.

▶ The list of patterns on the embroidery card appears.

4 Select the pattern as described on page 154 to 163.

■ **With patterns larger than 200 mm (H) × 360 mm (W) (7-7/8 inches (H) × 14 inches (W))**
When a pattern larger than 200 mm (H) × 360 mm (W) (7-7/8 inches (H) × 14 inches (W)) is selected, the following message appears.

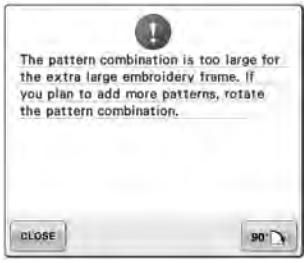

Touch to rotate the pattern 90 degrees before opening it.

If the data is larger than 200 mm (H) × 360 mm (W) (7-7/8 inches (H) × 14 inches (W)) even after it is rotated 90 degrees, the following message appears.

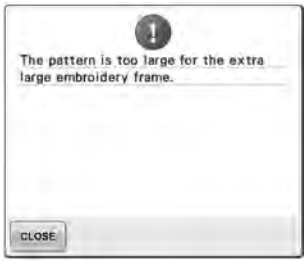

Touch to return to the pattern list screen.

Memo

- Perform the same operation when a pattern larger than 200 mm(H) × 360 mm(W) (7-7/8 inches (H) × 14 inches (W)) is selected, whether from the computer or USB media.

Computer (USB)

Using the included USB cable, the embroidery machine can be connected to your computer, and the embroidery patterns saved on the computer can be temporarily recalled and used from the machine.
Also, this machine is compatible with the Link function. The Link function enables you to send embroidery patterns edited on a computer to the embroidery machine. (Refer to “Sending Embroidery Patterns From a Computer to the Machine (Link Function)” on page 174.)

Note

Check that the computer to be connected meets the following operating conditions.

- Compatible models:
  IBM-PC with a USB port as standard equipment
  IBM-PC-compatible computer equipped with a USB port as standard equipment
- Compatible operating systems:
  Microsoft Windows 2000/XP, Windows Vista, Windows 7

■ Connecting

You can arrange the USB cable using the included USB clamp. (Refer to "Connecting the USB using the included USB cord clamps" on page 170.)

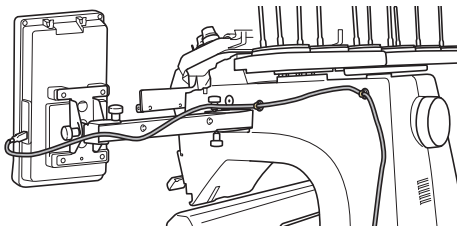

1 Plug the USB cable connector into the corresponding USB ports for the computer and for the machine.

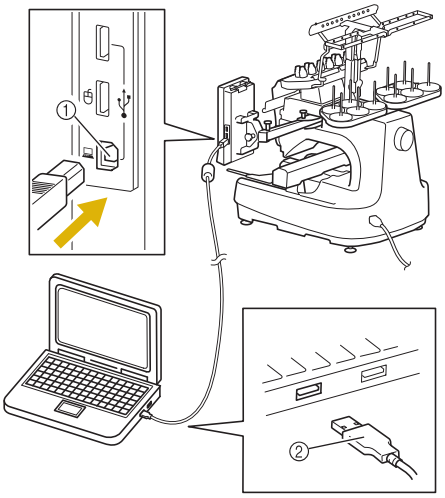

① USB port for computer
② USB cable connector

- The USB cable can be plugged into the USB ports on the computer and embroidery machine whether or not they are turned on.

Note

- The connectors on the USB cable can only be inserted into a connector in one direction. If it is difficult to insert the connector, do not insert it with force and check the orientation of the connector.
- For details on the position of the USB port on the computer, refer to the instruction manual for the corresponding equipment.

2 After the "Removable Disk" folder appears in the "Computer (My computer)" folder on the computer, the connection is completed.

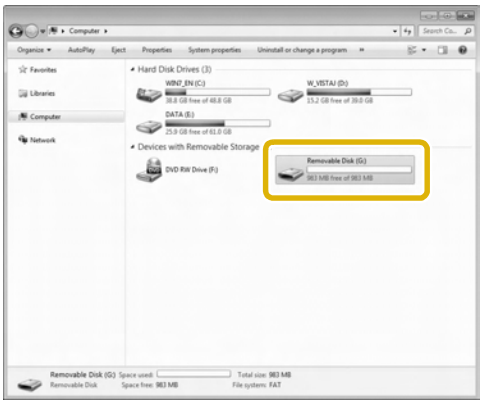

■ Recalling

1 Move/copy the pattern data that you wish to recall into the "Removable Disk" folder.

▶ Pattern data in the "Removable Disk" folder is written to the machine.

Note

- While data is being written, do not disconnect the USB cable.
- Do not create folders within the "Removable Disk" folder. Even if folders have been created, they will not appear in the machine's screen.
- While the machine is sewing, do not write data to or delete data from "Removable Disk".

2 **Touch** .

▶ The list of patterns is displayed.

3 **Select an embroidery pattern.**
Touch the desired pattern.

- If you decide not to recall the pattern, touch RETURN.

▶ The selected pattern appears in the pattern display area.

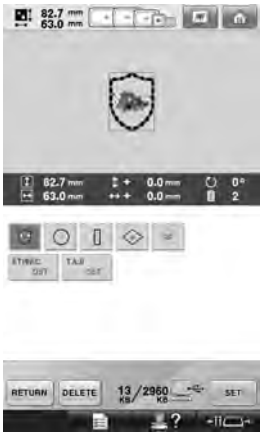

- If the wrong pattern was selected or you wish to select a different pattern, touch the desired pattern.

Memo

- For details on large-size embroidery patterns, refer to “Sewing Large-size (Split) Embroidery Patterns” on page 238.

- To add a pattern from the computer, repeat step 1.

▶ The following screen appears while data is written to the embroidery machine, and the key for that pattern appears when writing is finished.

① Added patterns

4 **Touch** SET.

This confirms the pattern selection.

▶ The pattern editing screen appears.

Note

- The pattern recalled from the computer is only temporarily written to the machine. It is erased from the machine when the machine is turned off. If you wish to keep the pattern, store it in the machine. (Refer to “Machine’s memory” on page 209.)

■ **If the desired pattern cannot be recalled**

When recalling pattern data from the computer, the data is not taken directly from the computer. Instead, the pattern data is temporarily written to the machine, and that written pattern data is recalled. A total of about 3 MB of embroidery patterns can be saved in the "Removable Disk". Pattern data cannot be recalled if that data amount is exceeded.

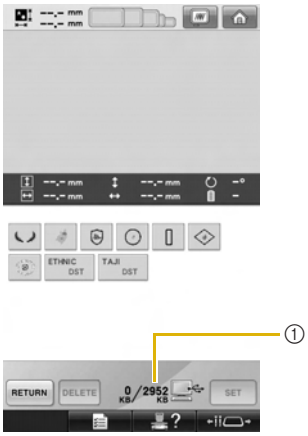

① Shows the amount of free space in the USB area of the machine. If pattern data with this size is added, it can be recalled (temporarily written).

To recall a pattern larger than the amount of space available, delete any currently written patterns, and then place the pattern that you wish to recall into the folder.

1 Remove all unnecessary patterns from the "Removable Disk" folder on the computer.

Select the pattern data, and then move it to a different folder, the Recycle Bin, or right-click it and click "Delete".

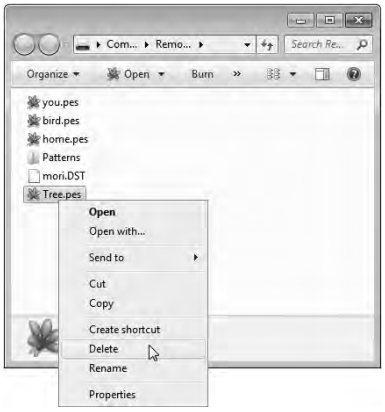

2 Place the pattern that you wish to recall into the "Removable Disk" folder.

▶ After writing the data to the embroidery machine, the key for that pattern appears in the screen.

3 If the desired pattern can still not be written, repeat steps 1 and 2.

■ **Disconnecting the USB cable**

Before disconnecting the USB cable, click the "Unplug or Eject Hardware" icon in the taskbar of Windows 2000, the "Safely Remove Hardware" icon in the taskbar of Windows XP/ Windows Vista or the "Safely Remove Hardware and Eject Media" icon in the taskbar of Windows 7. Then, when the removable disk can safely be removed, disconnect the USB cable from the computer and the machine.

In case of Windows 7

In case of Windows Vista

Note

- Be sure to perform the operation described above before disconnecting the USB cable from the computer and embroidery machine, otherwise the computer may malfunction, the data may not be written correctly, or the data or data writing area on the embroidery machine may be damaged.
- Do not unplug a USB device/media from this machine immediately after it has been plugged in. Be sure to wait at least 5 seconds before unplugging the USB device/media.

5

Connecting the USB using the included USB cord clamps

When connecting the embroidery machine to a computer, use the included USB cord clamps to keep the cord away from the carriage.

Included cord clamps

Installation positions of the USB cord clamps

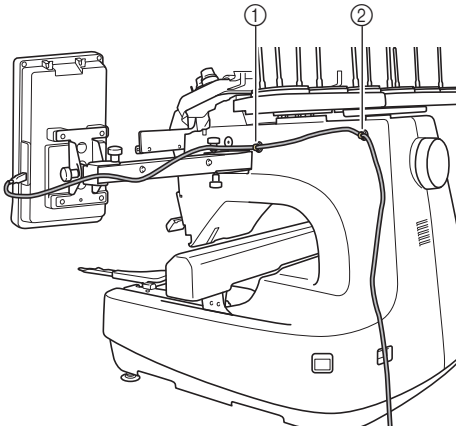

① Front screw hole on the side of the machine
② Rear screw hole on the side of the machine

1 Using the included Allen screwdriver, remove the protective cap covering the front screw on the side of the machine.

- Insert the end of the Allen screwdriver into the hole in the protective cap, and then lightly pull out the protective cap to remove it.

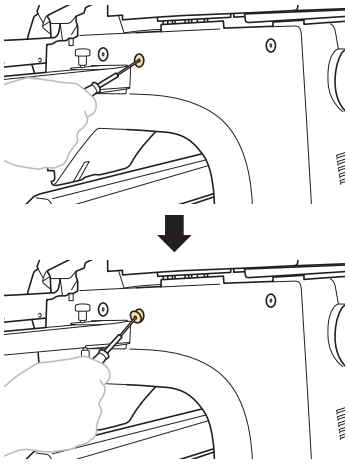

Note

- Do not insert the Allen screwdriver too far into the hole in the protective cap; otherwise, the machine or the Allen screwdriver may be damaged.

2 Open the USB cord clamp.

- With your fingernail, press on the tab to open the clamp.

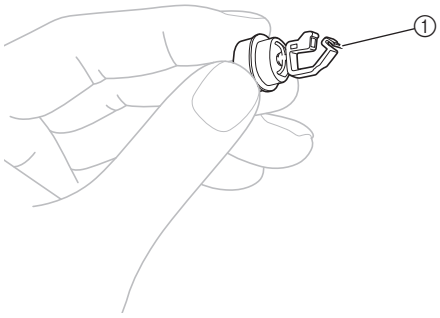

① Tab

3 Hold the clip end of the USB cord clamp, and then firmly insert the other end into the screw hole where the protective cap was removed.

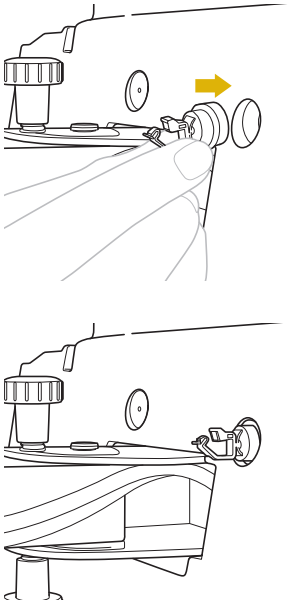

4 **As described in steps 1 through 3, remove the protective cap from the rear screw hole on the side of the machine, and then insert an opened USB cord clamp.**

5 **Check that the USB cord clamps have been firmly inserted into the front and rear screw holes on the side of the machine.**

- If the USB cord clamps are not firmly inserted into the screw holes, they are not correctly installed. Firmly insert the cord clamps into the screw holes.

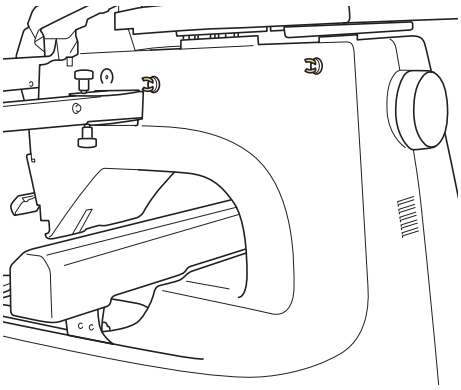

6 **Pass the USB cable through the front USB cord clamp, and then close the clamp to secure the cable.**

Note

- When passing the USB cable through the clamp, do not insert it with excessive force; otherwise, the clamp may break.

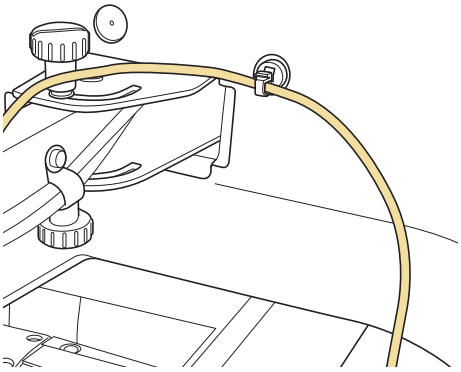

7 **Using the same operation described in step 5, secure the USB cable with the rear USB cord clamp.**

8 **Arrange the USB cable between the USB cord clamps so that the cable does not interfere with the operation of the machine.**

Memo

- Store the protective caps, which were removed in step 1, in the included accessory case so they will not be lost.

5

USB media

You can recall a specific embroidery pattern from either directly USB media or a folder in the USB media. If the embroidery pattern is under the folder, move down layers of folders following a path to it. For details on storing a pattern, refer to “USB media” on page 211.

Note

- USB media and reader/writer units can be purchased at electronic/computer retailers.
- Some USB media may not be usable with this machine. Please visit our web site “www.babylock.com” for more details.
- The processing speed may vary by port selection and quantity of data.

1 Insert the USB media into the primary (top) USB port on the machine.

Depending on the type of USB media being used, either directly plug the USB device into the machine’s USB port on the right side of the operation panel or plug the USB Card Reader/Writer into the machine’s port.

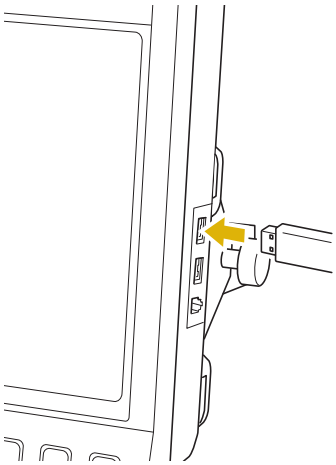

Note

- Do not insert anything other than USB media into the USB media port. Otherwise, the USB media drive may be damaged.

2 Touch [ ].

▶ A list of patterns and folders at the topmost level are displayed.

- The pattern list is usually displayed within a few seconds; however, if there are many patterns, it may take some time for them to be displayed. While the patterns are being read, do not remove the USB media. Instead, wait until the patterns are displayed.

3 To select a pattern in a lower-level folder, select the folder.

▶ The list of folders and patterns in the selected folder are displayed in order.

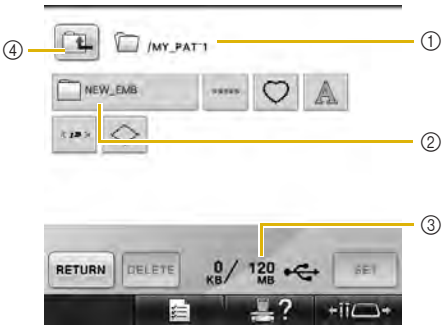

① Shows the name of the current folder.
② Shows the folder in the current folder. If the folder name is more than nine characters long, the name changes to the first six characters followed by “~” and a number.
③ Shows the amount of free space in the USB media.
④ Touch this key to move up one folder level.

4 **Select an embroidery pattern.**
Touch the key for the desired pattern.

- Touch RETURN to return to the original screen.

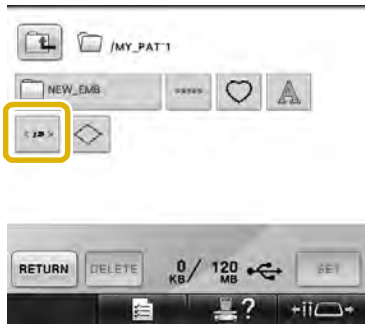

▶ The selected pattern appears in the pattern display area.

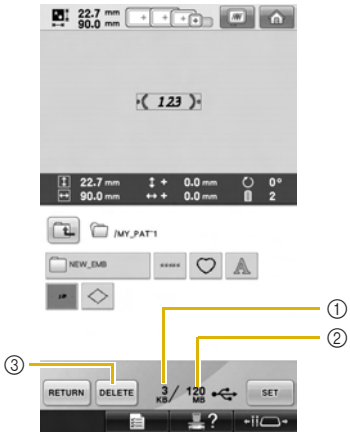

① Shows the amount of memory used by selected pattern.
② Shows the amount of free space in the USB media.
③ Touch this key to delete the selected pattern.

▶ If the wrong pattern was selected or you wish to select a different pattern, touch the key for the desired pattern.

■ **Deleting embroidery data**
From this screen, the embroidery data stored on the USB media can be organized by deleting unnecessary data.
After selecting the pattern that you wish to delete, touch DELETE to display the screen shown below.

① Deletes the data, then returns to the screen with no pattern selected.
② Does not delete the data, then returns to the screen before DELETE was touched.

Note

- To delete the USB media pattern data, delete it from the machine. This will delete design data completely.

5 **Touch SET.**

This confirms the pattern selection.

▶ The pattern editing screen appears.

Note

- Do not unplug the USB media or CD while a pattern is being read or deleted, otherwise the USB media may be damaged or data may be lost.
  In addition, do not unplug the USB media or CD while the contents of the USB media, or CD are displayed.
- Do not unplug a USB device/media from this machine immediately after it has been plugged in. Be sure to wait at least 5 seconds before unplugging the USB device/media.

Sending Embroidery Patterns From a Computer to the Machine (Link Function)

This machine is compatible with the Link function. This function allows embroidery patterns edited in embroidery editing software provided with the Link function, such as Palette 9 or later, to be transferred from a computer to multiple embroidery machines. As many as 100 embroidery patterns can be transferred to an embroidery machine, and the embroidering status of the patterns being transferred can be viewed from the computer monitor.
Use the included USB cable to connect the embroidery machine to a computer.

Operations available with the Link function

■ **Send multiple embroidery patterns to connected embroidery machines**

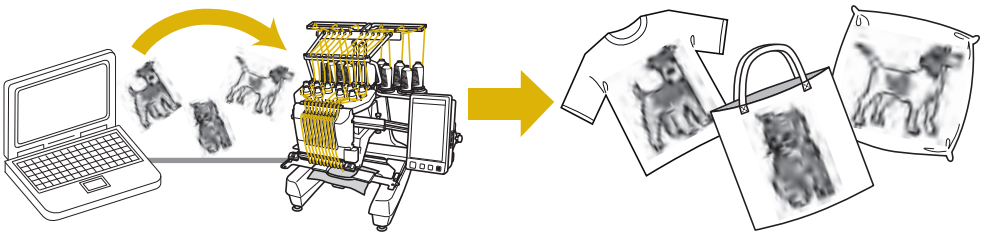

■ **Check the sewing status of the embroidery machine (this model) from the computer**
(Example of multiple machines connected)

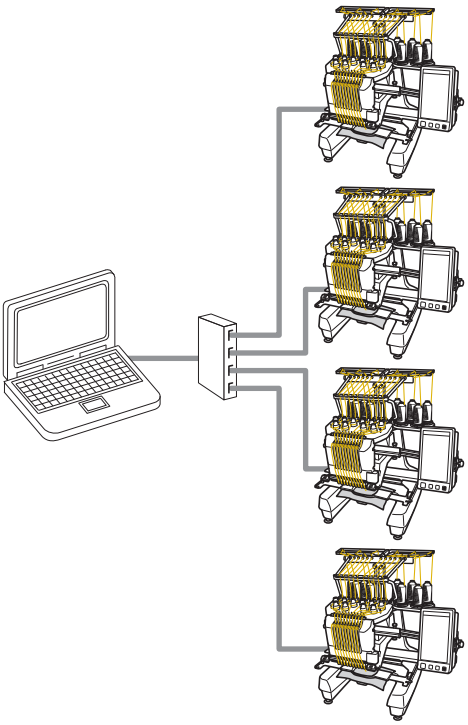

Memo

- When connecting multiple embroidery machines to the computer, use a commercially available USB hub. Please note that we recommend using a self-powered USB hub. Do **not** use USB extension cables or repeater cables. For details on using the USB hub, refer to its operating instructions.

Embroidering using the Link function

First, use the embroidery editing software to create the embroidery pattern to be sent to the embroidery machine.

Note

- Only embroidery data in the PES format (.pes) can be embroidered using the Link function.
- The Link function cannot be used with large-size (split) embroidery patterns or embroidery patterns for the jumbo frame (optional).
- Attach to the embroidery machine the embroidery frame for the size of the pattern to be sent.

1 **Touch , and then touch and to display page 5/5 of the settings screen.**

2 **Touch ON to enable the Link function.**

▶ When the following message appears, touch OK.

3 **Turn off the machine.**

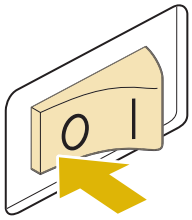

4 **Use the included USB cable to connect the embroidery machine to the computer.**

- When connecting the embroidery machine to the computer, be sure to use the included USB cord clamps. For details on using the USB cord clamps, refer to page 170.

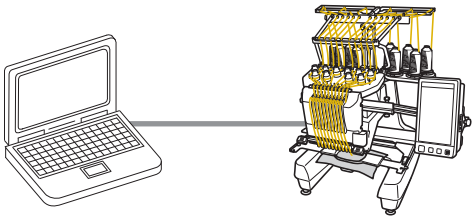

5 **Turn on the machine.**

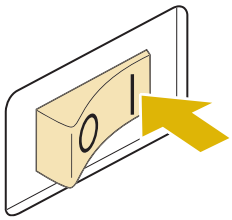

6 **Using the embroidery editing software provided with the Link function, such as Palette 9 or later from a computer, will allow you to send the embroidery pattern(s) to the machine in the Link mode.**

7 **When the following message appears, touch OK.**

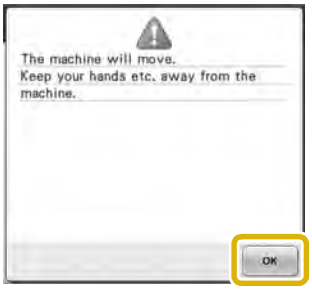

▶ A message appears in the machine's LCD while the machine is connecting to PC.

Note

- For details on using the embroidery editing software, refer to the Instruction Manual included with it.

* This Link dialog box is found in Palette 9 software.

- If the following error message appears, the type of embroidery frame installed on the machine is not compatible with the size of the pattern. Replace the embroidery frame with one compatible with the size of the pattern.

8 **After the embroidery pattern has been opened by the machine, the embroidering screen appears.**

▶ The opened embroidery pattern appears in the pattern display area with the icon for the Link function.

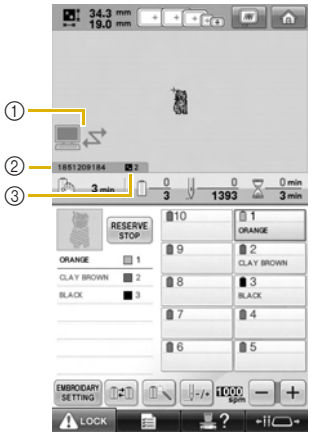

① Icon for Link function
② 10-digit machine ID
③ Number of the pattern in the queue

- Touch to delete the pattern.

Memo

- While the embroidery machine is connected to the computer, the machine's status can be displayed by using a function of the embroidery editing software. If multiple embroidery machines are connected at the same time, check the status of the machines using the 10-digit machine ID that appears in the machine's screen. The following information can be viewed from the computer.
  - Number of the stitch being sewn and total number of stitches in the pattern
  - Information on sewing errors

9 **To change the embroidery settings for the opened embroidery pattern, touch** **.**

- Touch when the following message appears. Touch 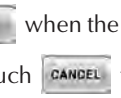 to return to the embroidering screen.

▶ The embroidery settings screen appears.

10 **After the desired settings have been specified, touch** **to return to the embroidering screen.**

11 **Touch** **, and then press the start/stop button to start embroidering.**

▶ When embroidering is finished, the following message appears.

12 **To open another pattern sent from the computer, touch [OK], and then repeat the procedure starting from step 8 to continue embroidering.**

To stop embroidering or to embroider the same pattern again, touch [CANCEL].

Note

- The embroidering screen settings specified in step 10 are saved even if [OK] was touched to continue sewing after embroidering is finished.

Memo

- If the embroidery machine is turned off while it is embroidering, the resume operation can be used the next time it is turned on.

Disabling the Link function

1 **Touch [ ], and then touch [◄] and [►] to display page 5/5 of the settings screen.**

2 **Touch [OFF] to disable the Link function.**

▶ When the following message appears, touch [OK].

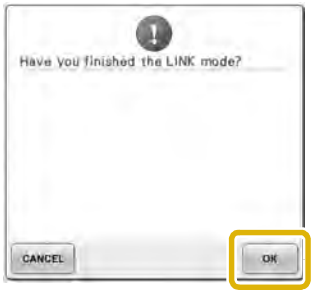

3 **Turn off the machine.**

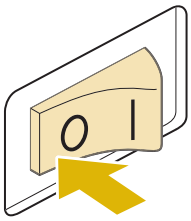

Editing the Embroidery Pattern (Pattern Editing Screen)

The patterns can be edited from the pattern editing screen and the embroidering settings screen. Individual patterns can be edited with the pattern editing screen, and the entire pattern can be edited with the embroidering settings screen. The results of editing the pattern can be seen in the pattern display area.

Enlarge the pattern image on the screen

You can view the pattern image twice the size of the normal previewed image.

1 **Touch** .

▶ The enlarged pattern image is displayed on the screen.

- Press , , and on the pattern display area to view the hidden area of the pattern.

2 **Touch** **to return to the normal size image.**

Combining patterns

Various patterns, such as embroidery patterns, frame patterns, built-in alphabet patterns and patterns on embroidery cards, can easily be combined.

1 **Touch** .

▶ The pattern type selection screen appears again.

- Touch in the pattern type selection screen, if you no longer want to combine patterns. The pattern editing screen will then appear. This key is not available unless a pattern has been previously selected.

5

2 Select an embroidery pattern.
Select the pattern to be added as described on page 153 to 173.

- When another pattern is selected, it is normally added at the center of the pattern display area.

3 Repeat steps 1 and 2 until all patterns to be combined are selected.

Memo

- The position of individual patterns and other editing operations can be performed from the pattern editing screen. The editing operations can be performed in the same way from the pattern editing screen whether it is displayed as each pattern is selected or after all patterns that you wish to combine have been selected.

Selecting the pattern to be edited

If multiple patterns are selected, you can choose which pattern will be edited.

1 Touch ◄ or ►.

The pattern that will be edited is the pattern enclosed by the red frame.

Continue touching ◄ and ► until the red frame is around the pattern that you wish to edit.

▶ The patterns are selected in the order or the opposite order that they were added to the pattern.

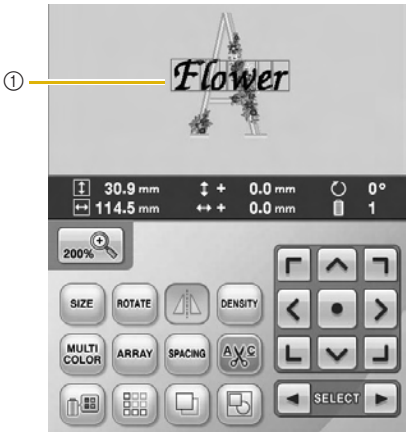

① Red frame indicating the pattern to be edited.

Memo

- If multiple patterns appear in the pattern editing screen, the basic editing procedure is to 1. select the pattern to be edited, and then 2. edit that pattern.

Moving a pattern

Determine where in the embroidery frame the pattern will be embroidered. If multiple patterns are combined, move each pattern to lay out the design.

1 Touch the key for the direction where you wish to move the pattern.

▶ The pattern moves in the direction of the arrow on the key.

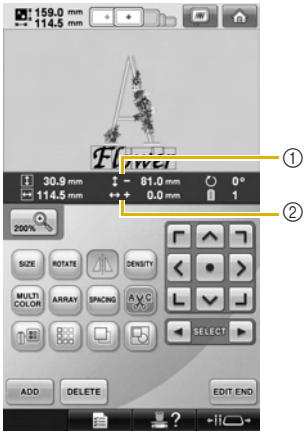

① Shows the vertical distance moved from center.
② Shows the horizontal distance moved from center.

Memo

- If you wish to group combined patterns, refer to “Editing patterns as a group” on page 202.

- To return the pattern to its position before it was moved (center of the embroidery frame), touch [•].

The pattern can also be moved by dragging it. If a USB mouse is connected, move the mouse to position the pointer on the desired pattern, and then hold in the left mouse button while dragging the pattern. The pattern can also be dragged by selecting it directly in the screen with your finger or the touch pen.

Note

- The pattern can only be moved when the arrow keys are on the screen.

Memo

- The pattern can also be moved by touching the arrow keys in the screens that appear when any of the other editing keys are touched.
- The arrow keys in the embroidering settings screen are used to move the frame to select the embroidering position.

5

Flipping a pattern horizontally

1 **Touch so that it changes to .**

▶ The pattern is flipped horizontally.

- Each touch of the key turns the setting either on or off.

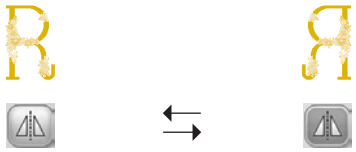

Horizontal flip turned off

Flipped horizontally

Changing the size of a pattern

The size of the pattern can be increased or decreased to between 90% and 120% of its original size.

1 **Touch .**

▶ The screen shown below appears.

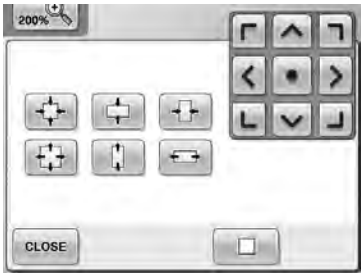

Example: Original angle

	Reduces without changing the height-to-width proportion.	
	Reduces only in the vertical direction.	
	Reduces only in the horizontal direction.	
	Enlarges without changing the height-to-width proportion.	
	Enlarges only in the vertical direction.	
	Enlarges only in the horizontal direction.	
	Moves the pattern in the direction of the arrow on the key.	
	Touch this key to return the pattern to its original size.	

2 **After making the desired changes, touch .**

3 **Touch the keys to adjust the pattern to the desired size.**
Each touch of a key slightly enlarges or reduces the pattern.

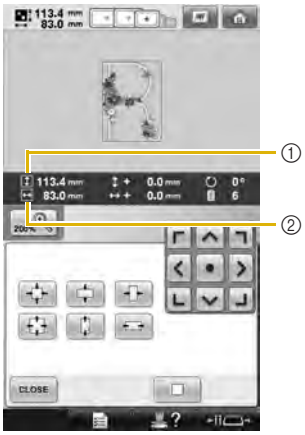

The size of the pattern is displayed after a key is touched to change it.
① Vertical length
② Horizontal width

- The size that the pattern can be enlarged depending on the pattern or character.
- Depending on the pattern or character, if it is rotated 90 degrees it may be enlarged even more.
- If the pattern is rotated, the vertical and horizontal directions may be reversed.
- To return the pattern to its original size, touch □.

4 **If necessary, touch the arrow keys to adjust the position of the pattern.**
(For more details, refer to page 181.)

5 **After making the desired changes, touch CLOSE.**

▶ The pattern editing screen appears again.

CAUTION

- **After changing the size of the pattern, check the icons for the embroidery frames that can be used and use only the indicated frames. If a frame other than those indicated are used, the presser foot may hit the embroidery frame and cause injuries.**

Rotating a pattern

The pattern can be rotated between 1 and 359 degrees either clockwise or counterclockwise.

1 **Touch ROTATE.**

▶ The screen shown below appears.

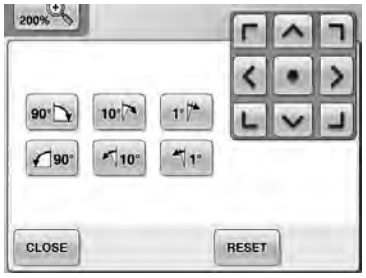

Example: Original angle

90°	Rotates 90 degrees to the right	
10°	Rotates 10 degrees to the right	
1°	Rotates 1 degree to the right	
90°	Rotates 90 degrees to the left	
10°	Rotates 10 degrees to the left	
1°	Rotates 1 degree to the left	

Moves the pattern in the direction of the arrow on the key.

Touch this key to return the pattern to its original angle.

Touch this key to close this screen.

2 Touch the keys to adjust the pattern to the desired angle.
Each touch of a key rotates the pattern.

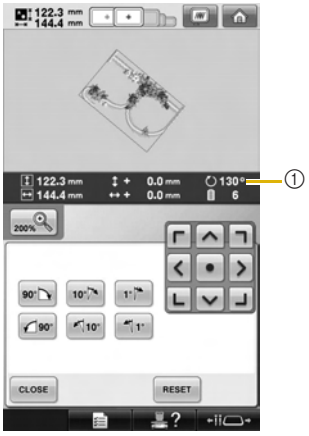

① Shows the angle of the pattern after a key is touched to change it.

- To return the pattern to its original angle, touch RESET.

3 If necessary, touch the arrow keys to adjust the position of the pattern.
(For more details, refer to page 181.)

4 After making the desired changes, touch CLOSE.

▶ The pattern editing screen appears again.

CAUTION

- **After changing the angle of the pattern, check the icons for the embroidery frames that can be used and use only the indicated frames. If a frame other than those indicated are used, the presser foot may hit the embroidery frame and cause injuries.**

Memo

- If ROTATE in the embroidering settings screen is used, the entire combined pattern can be rotated. (For details, refer to "Rotating the entire pattern" on page 203.)
- If the pattern is too large or the pattern is too close to the edge of the embroidery field, all of the rotating options may not apply.

Changing the text arrangement of a character

Characters can be arranged on a horizontal line, on a slant or on an arc.

1 Touch ARRAY.

▶ The screen shown below appears.

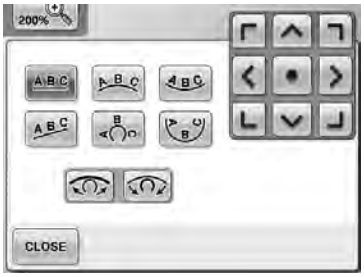

Arranges the text on a straight line.

Arranges the text on the outside of a wide curve.

Arranges the text on the inside of a wide curve.

Arranges the text on a slanted line.

Arranges the text on the outside of a sharp curve.

Arranges the text on the inside of a sharp curve.

If text is arranged on a curve, each touch of this key decreases the bend of the curve (makes it flatter).

If text is arranged on a curve, each touch of this key increases the bend of the curve (makes it more curved).

2 Touch the key of the desired text arrangement.

3 After selecting the desired text arrangement, the bend of the curve can be adjusted. If necessary, touch and to adjust the bend of the curve.

Memo

- When selecting , and change to and . You can increase or decrease the incline.

4 If necessary, touch the arrow keys to adjust the position of the pattern.
(For more details, refer to page 181.)

5 After making the desired changes, touch CLOSE.

▶ The pattern editing screen appears again.

Memo

- The text arrangement specified when the character was selected on page 162 can be changed at this point.

Changing the character spacing

The spacing between the characters can be made wider or narrower.

1 Touch SPACING.

▶ The screen shown below appears.

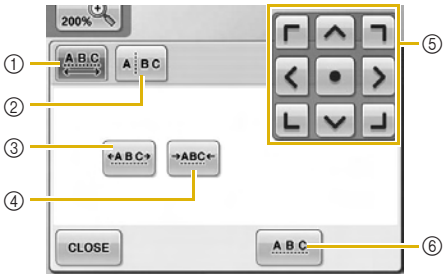

① Specifies that all of the characters in a word selected will be spaced equally.
② Separates characters to be spaced and positioned individually.
③ Increases the space between characters equally.
④ Decreases the space between characters equally.
⑤ Moves the pattern in the direction of the arrow on the key.
⑥ Selects the standard character spacing (original character spacing).

2 Touch the keys to adjust the characters to the desired spacing.
Each touch of a key slightly increases or decreases the character spacing.
- To return the characters to their original spacing, touch .

3 If necessary, touch the arrow keys to adjust the position of the pattern.
(For more details, refer to page 181.)

4 After making the desired changes, touch CLOSE.

Separating combined character patterns

Combined character patterns can be separated to adjust the character spacing or to separately edit the patterns after all character have been entered.

1 Touch SPACING.

2 Touch A B C.

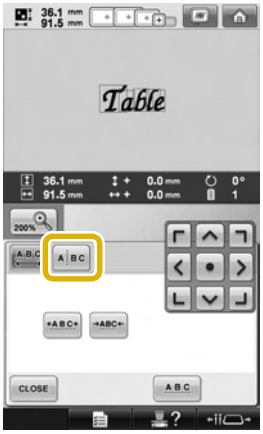

▶ The key appears as A B C.

3 Use ← → to select where the pattern is to be separated, and then touch to separate it. For this example, the pattern will be separated between "T" and "a".

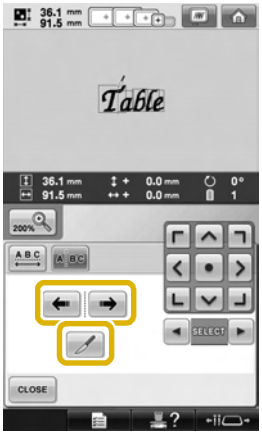

Note

- A separated character pattern cannot be combined again.

4 Use ◀ and ▶ to select a pattern, and then use to adjust the character spacing.

5 Touch CLOSE.

Trimming the threads between characters

If the machine is set to trim the threads between the characters, the jumpstitches between the characters are reduced and any other necessary procedures after embroidering are reduced. However, the embroidering time will increase if the threads are trimmed between each of the characters.

1 Touch so that it changes to .

- Each touch of the key turns the setting either on or off.

Threads are not trimmed. Threads are trimmed.

Changing the thread density

(only for selected character and frame patterns)

The thread density for some character and frame patterns can be changed.
A setting between 80% and 120% in 5% increments can be specified.

1 Touch DENSITY.

▶ The screen shown below appears.

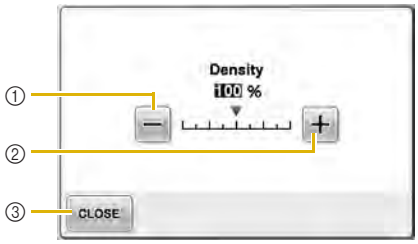

① Selects a less thread density
② Selects a more thread density
③ Touch this key to close this screen.

■ Selects a less/more thread density

5

2 Touch the keys to select the desired thread density.

Each touch of a key slightly increases or decreases the thread density.

- To return to the original thread density (standard), select “100%”.

3 After making the desired changes, touch CLOSE.

▶ The pattern editing screen appears again.

Specifying multi-color text

The alphabet pattern characters selected on page 159 are set to black. The color of the characters can be changed using the change thread color key; however, to change the color of individual characters, touch the Multi Color key to turn it on, and then specify the color for each character.

1 Touch MULTI COLOR so that it changes to MULTI COLOR.

- Each touch of the key turns the setting either on or off.

Multi-color text turned off — Multi-color text turned on

- For details on changing the thread color, refer to “Changing the colors of the pattern” on page 188.

Changing the colors of the pattern

The colors of the pattern can be changed and previewed on the screen.
By changing the colors of the pattern, the same pattern can be viewed in various ways.
If your thread colors are registered in a color thread table and if you used the table for changing color, the thread spools can be assigned with the thread colors that you have. And the pattern displayed in the screen will appear with colors that are almost the same as the actual thread colors.
With this operation, the colors of all patterns will be changed, not just those of the pattern being edited.

1 Touch .

▶ The 64 embroidery threads table screen appears.

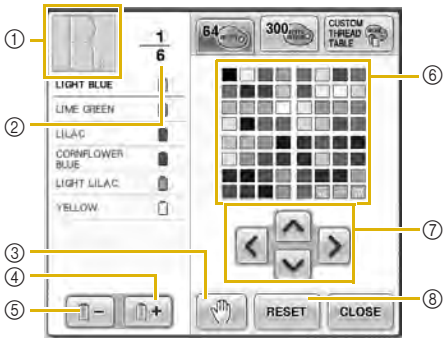

① The part of the pattern in the color at the top of the thread color sequence display is the part whose color is being changed.
② Shows the number of thread color changes. The top value shows the position in the sewing order for the color at the top of the thread color sequence display and the bottom value shows the total number of thread color changes.
③ Specifies pause locations. (Refer to “Specifying pause locations before embroidering” on page 140.)

④ Selects the next color in the thread color sequence display.
⑤ Selects the previous color in the thread color sequence display.
⑥ Thread color table
Select a color from this table.
⑦ Use these keys to select a color from the thread color table.
⑧ Touch this key to return to the original color.

2 Touch [−] and [+] until the color to be changed appears at the top of the thread color sequence display.

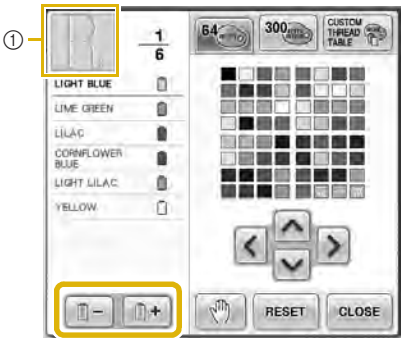

① The thread color for the part of the pattern displayed at the top will be changed.

3 Touch [^], [<], [>] and [v] to select the new color from the color palette.

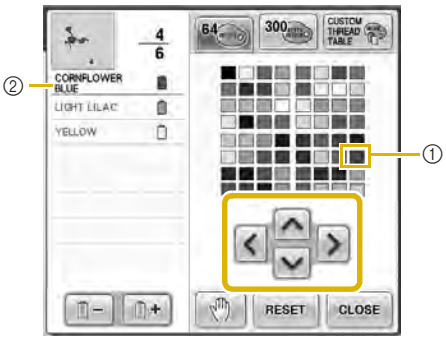

① The color that appears enlarged is the color that is selected.
② Displays the name of the selected thread color

▶ In the pattern display area, the color of the selected part of the pattern is changed.

4 Touch [CLOSE].

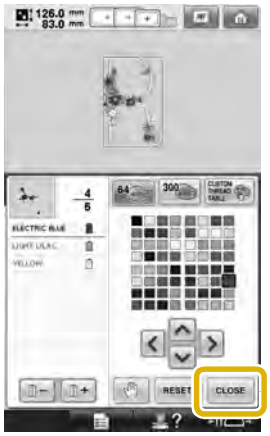

▶ The color change is confirmed.

▶ The pattern editing screen appears again.

Memo

- Touch [✋] to specify pause locations. (For details, refer to "Specifying pause locations before embroidering" on page 140.)
- The color thread table can be changed to a custom thread table that you create to reflect the thread colors that you have. (Refer to "Creating a custom thread table" on page 198.)

5

Designing repeated patterns

Using the border function, you can create stitches using repeated patterns. You can also adjust the spacing of the patterns within a repeated pattern stitch.

1 **Touch** .

2 **Select the direction in which the pattern will be repeated.**

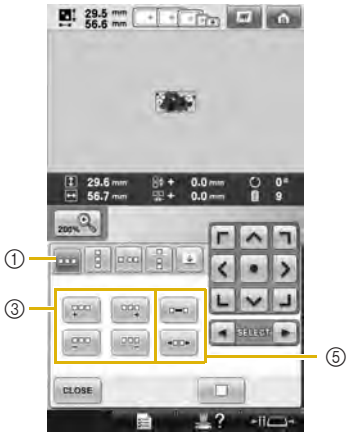

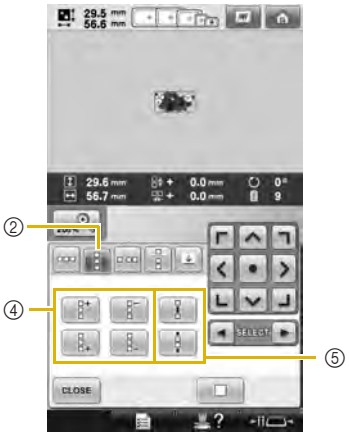

① Horizontal direction
② Vertical direction
③ Repeating and deleting horizontal keys
④ Repeating and deleting vertical keys
⑤ Spacing keys

▶ The pattern direction indicator will change depending on the direction selected.

3 **Use** **to repeat the pattern on left and** **to repeat the pattern at the right.**

- To delete the left pattern, touch .
- To delete the right pattern, touch .

4 **Adjust the spacing of the repeated pattern.**

- To widen spacing, touch .
- To tighten spacing, touch .

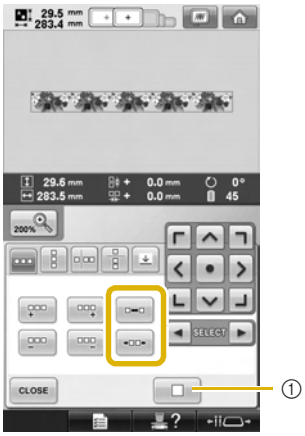

① Touch to change a repeated pattern back to one single pattern.

Memo

- You can only adjust the spacing of patterns included in the red frame.

5 **Complete repeated patterns by repeating steps ❷ through ❹.**

6 **After making the desired changes, touch CLOSE.**

The pattern editing screen appears again.

Memo

- When there are two or more patterns, all patterns will be grouped together as one pattern in the red frame.

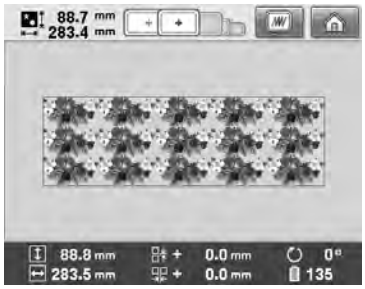

- When changing the direction in which the pattern will be repeated, all of the patterns in the red frame will automatically be grouped as one repeating unit. See the following section on how to repeat one element of a repeated pattern.

5

■ **Repeating one element of a repeated pattern**

By using the Cut function, you can select one element of a repeated pattern and repeat only that single element. This function allows you to design complex repeated patterns.

1 Choose the direction in which the repeated pattern will be cut.

- Touch to cut horizontally.
- Touch to cut vertically.

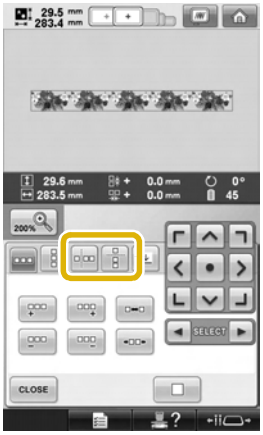

▶ The pattern direction indicator will change depending on the direction selected.

2 Use and to select the cut line.

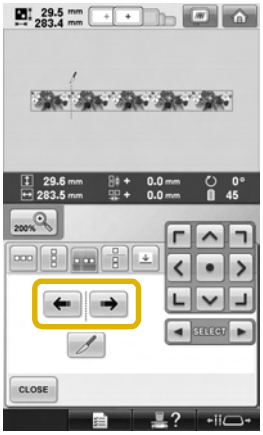

▶ The cut line will move.

3 Touch .

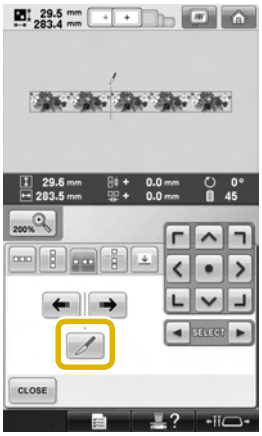

▶ The repeated pattern will be divided into separate elements.

4 Touch .

5 Use and to select the element to repeat.

6 Repeat the selected element.

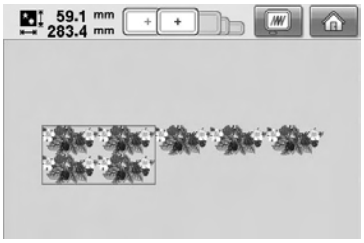

7 **After making the desired changes, touch CLOSE.**

The pattern editing screen appears again.

Note

- Once you have cut a repeated pattern into separate elements, you cannot return to the original repeated pattern.
- Each element can be edited separately in the edit screen. Refer to “Selecting the pattern to be edited” on page 180.

■ Assigning thread marks

By sewing thread marks, you can easily align patterns when sewing a series. When sewing is finished on a pattern, a thread mark in the shape of an arrow will be sewn using the final thread. When sewing a series of patterns, use the point of this arrow for positioning the following designs to be sewn.

Memo

- When repeatedly sewing individual patterns, thread marks can be sewn around the perimeter of the pattern only.

1 **Touch .**

2 **Touch .**

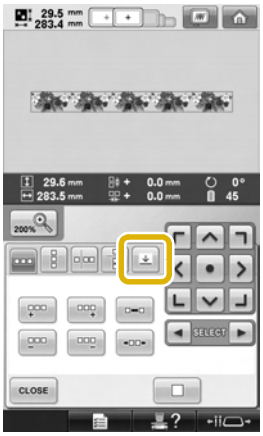

3 **Touch to indicate the position on design where thread mark is to be sewn.**

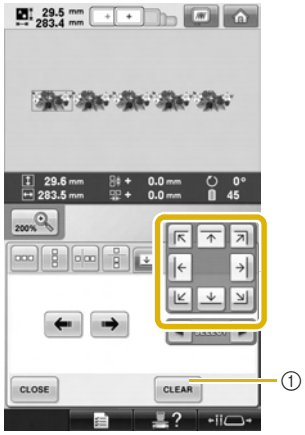

① Touch to cancel thread mark setting.

Memo

- When there are two or more elements, use and or and to select a pattern that you want to assign a thread mark(s) to.

4 **Touch CLOSE.**

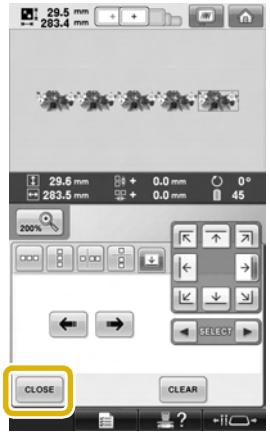

Note

- If the combined border pattern is rotated in the embroidery settings screen, the thread mark will be removed.

■ Color sorting repeated patterns

Touch SEWING to automatically change the sewing order of colors for combined border embroidery patterns so that the same color can be continuously sewn. This allows you to continue sewing without repeatedly changing the upper thread or changing the sewing order manually.

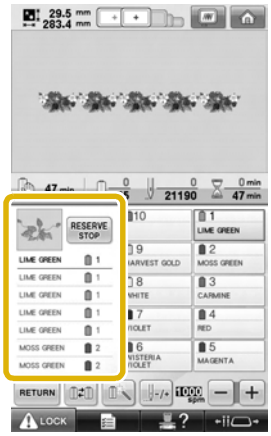

Memo

- In combined stitch patterns that contain two or more border patterns or other patterns combined with border patterns, the sewing order of only the border patterns is changed.
- When a group of two or more patterns using border patterns is repeated, the sewing order is changed so that the same color can be sewn continuously in each pattern.
- To sew a repeated pattern without sorting colors, refer to “Sewing the repeated pattern without sorting colors” on page 194.

■ Sewing the repeated pattern without sorting colors

Edit the pattern according to the procedure below to sew the repeated pattern without sorting the colors.

1 **Create the combined border embroidery pattern (Refer to page 190 to 191).**

2 **Touch so that it change to .**

▶ The border function is canceled.

3 **If necessary, touch so that the patterns are grouped.**

▶ All patterns displayed in the pattern display area are grouped.

4 **If necessary touch [ ] to sew the thread mark, and then touch [CLOSE].**
(Refer to page 193)

5 **Touch [EDIT END], then [SEWING].**

■ **Embroidering the pattern repeatedly**
After creating the repeated pattern, rehoop the embroidery frame and keep sewing for the next pattern.

Memo

- The border frame (optional) allows you to easily rehoop the fabric without removing the embroidery frame from the machine.

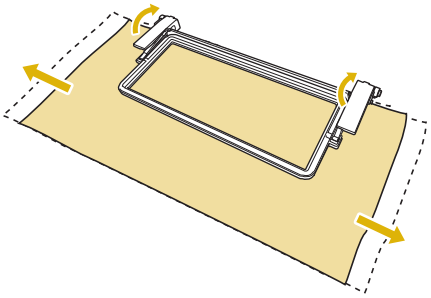

1 **Create the repeated pattern with the thread mark at the center of the end of the pattern.**
Refer to "Assigning thread marks" on page 193.

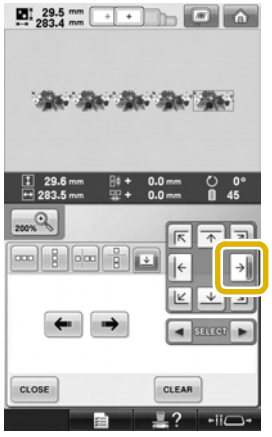

2 **Touch [CLOSE], then [SEWING].**

3 **Touch LOCK, and then press the start/stop button to start embroidering.**

▶ When embroidering is finished, the thread mark is sewn with the last thread color.

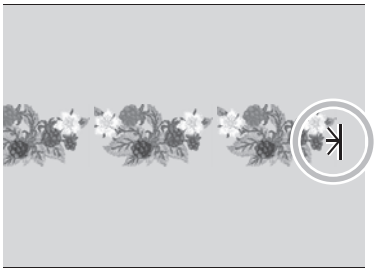

4 **Remove the embroidery frame.**

5 **Rehoop the fabric in the embroidery frame.**

Note

- Adjust the position of the fabric so that the embroidering area for the next pattern is within the embroidering area of the embroidery sheet.

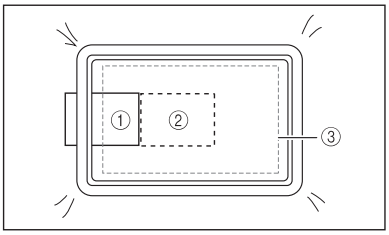

① Pattern embroidered first
② Position of pattern to be embroidered next
③ Embroidering area of embroidery sheet

6 **Attach the embroidery frame to the machine, and then touch in the embroidering settings screen.**

7 **Touch to set the starting point to the left side of the pattern.**

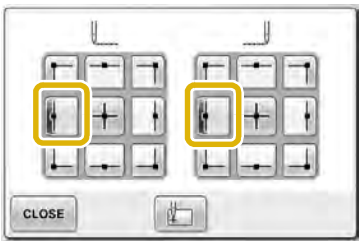

8 **Touch CLOSE.**

9 **Touch .**

- To adjust the embroidering position without using the built-in-camera, refer to "Changing the Embroidering Position" on page 99.

10 **Touch to display the grid lines.**

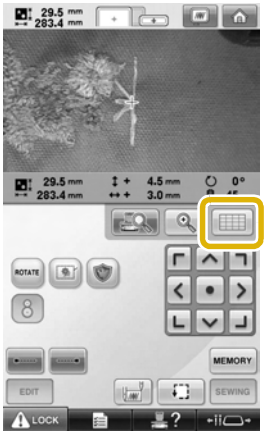

11 **Touch the positioning keys to move the embroidery frame until the thread mark on the fabric is aligned on the starting point in the camera view window.**

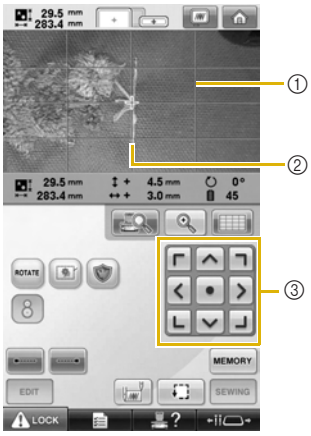

① Grid lines
② Thread mark on the fabric
③ Positioning keys

- Touch to check the embroidering position.

Memo

- Touch to enlarge the camera view. By enlarging the camera view, you can make a close adjustment for the needle drop position moving the embroidery frame little by little.

12 **If the pattern position cannot be aligned using the positioning keys, rehoop the fabric, and then try again to align the position with the positioning keys.**

Note

- After you have aligned the position of the combined border pattern, do not rotate the pattern in the embroidery settings screen. If the pattern is rotated in the embroidery settings screen, you cannot sew the pattern properly aligned even if the thread mark and the starting point are aligned in the camera view window.

13 **Touch to return to the previous screen.**

14 **Remove the thread mark.**

15 **Touch .**

16 **Touch , and then press the start/stop button to start embroidering.**

5

Creating a custom thread table

You can create a custom thread table containing the thread colors that you most often use. You can select thread colors offered by the machine's extensive list of thread colors from nine different thread brands. You can select any color and move the color to your custom thread table.

Note

- Some machine models may already have an additional 300 Robison-Anton thread colors contained in the custom thread table.
- You have the option to completely clear, or to restore the Custom Thread Table to the original factory setting. Visit our website at "www.babylock.com" for Custom Thread Table Clear/Restore Program and instructions.

Before creating a custom thread table, select a pattern and display the pattern editing screen. (Refer to page 46 and 74.)

1 **Touch** **and then touch**

.

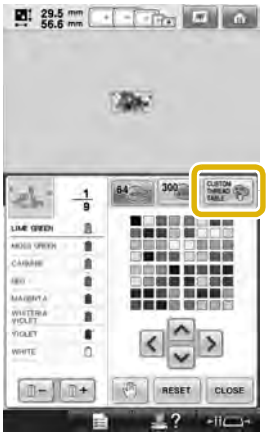

2 **Use** **to choose where to add a color on the custom thread table.**

- You can choose color box from the custom thread from the custom thread table by directly touching the screen with the touch pen.
- You can scroll through 100 colors at a time using and on the custom thread table.

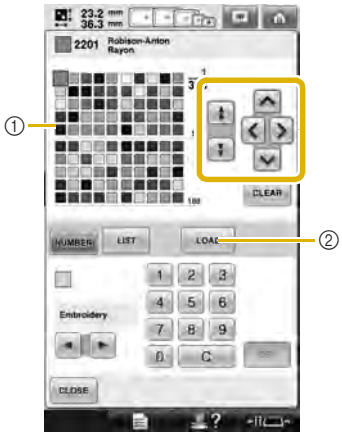

① Custom thread table

② Touch

to download the clear and restore programs from the website

3 **Use** **to select one of the thread brands in the machine.**

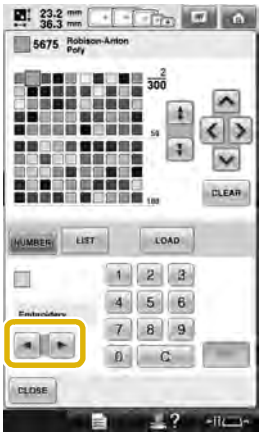

4 Use 1 2 3 4 5 6 7 8 9 0 **to enter a color's 4-digit number.**

- If you make a mistake, touch C to erase the entered number, and then enter the correct number.

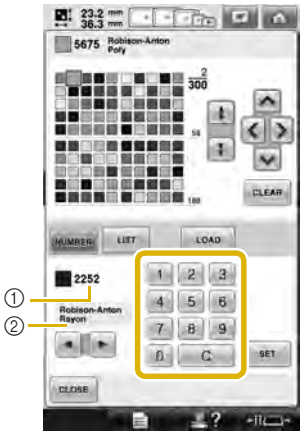

① Entered thread color number
② Thread brand

5 **Touch SET .**

① Selected thread color

▶ The selected thread color is set in the custom thread table.

Note

- If SET is not touched, the thread color number will not be changed.

6 **Repeat the previous steps until all desired thread colors are specified.**

- To delete a specified color from the palette, touch CLEAR .

Note

- When setting up custom thread table, touch ⌃, ‹, › or ⌄ or touch the next square directly to set the next color after each selection. Machine will not advance to the next square automatically.

7 **Touch CLOSE to return to the original screen.**

■ Adding a color to the custom thread table from the list

1 **Repeat the previous step ❶ on page 198.**

2 **Touch LIST to display the thread list.**

3 **Use ▲ ▼ to select a thread color.**

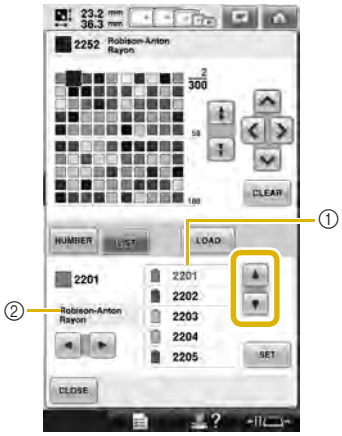

① Thread list
② Thread brand

4 **Touch SET .**

5 **Repeat the previous steps until all desired thread colors are specified.**

- To delete a specified color from the palette, touch CLEAR.

Note

- When setting up custom thread table, touch ⌃, ‹, ›, or ⌄ or touch the next square directly to set the next color after each selection. Machine will not advance to the next square automatically.

6 **Touch CLOSE to return to the original screen.**

Choosing a color from the custom thread table

You can select a color from the up to 300 thread colors you have set in the custom thread table.

1 **Touch .**

▶ The 64 embroidery threads table screen displays.

2 **Touch .**

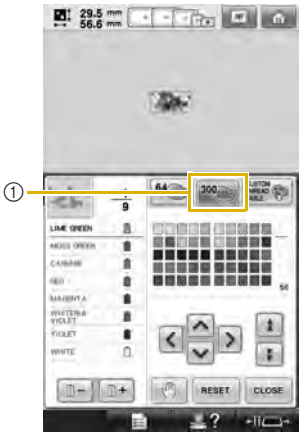

① Custom thread change key

▶ The custom thread (300 embroidery threads) table screen will appear.

3 **Touch ⌃ ⟨ ⟩ ⌄ to choose a new color from the custom thread table.**

- Use ⇧ and ⇩ to scroll through the custom thread table.
- Touch RESET to return to the original color.
- You can choose colors from the custom thread (300 embroidery threads) table by directly touching the screen with the touch pen.

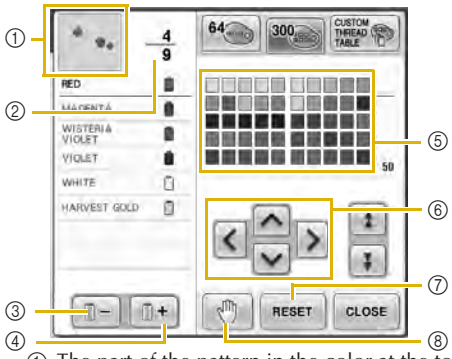

① The part of the pattern in the color at the top of the thread color sequence display is the part whose color is being changed.
② Shows the number of thread color changes. The top value shows the position in the sewing order for the color at the top of the thread color sequence display and the bottom value shows the total number of thread color changes.
③ Selects the previous color in the thread color sequence display.
④ Selects the next color in the thread color sequence display.
⑤ Color thread table
Select a color from this table.
⑥ Use these arrows to navigate the color selection within the color thread table.
⑦ Touch this key to return to the original color.
⑧ Specifies pause locations. (Refer to "Specifying pause locations before embroidering" on page 140.)

▶ The display shows the changed colors.

4 **Touch CLOSE.**

Memo

- Touch ✋ to specify pause locations.
  For details, refer to "Specifying pause locations before embroidering" on page 140.

Duplicating a pattern

1 **Touch ⧉.**

▶ The duplicate is positioned over the original pattern.

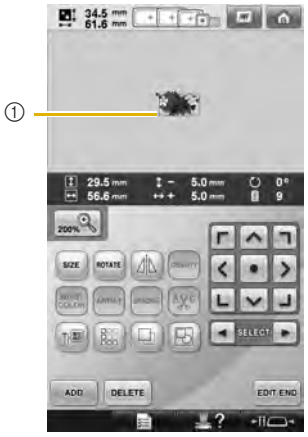

① Duplicated pattern

Note

- If multiple patterns are displayed in the screen, only the pattern selected using ◀ and ▶ is duplicated.
- Move and edit each duplicated pattern individually.

Editing patterns as a group

Combined patterns can be grouped and can all be edited (rotated, resized, etc.) at the same time.

1 **Touch so that it changes to .**

▶ All patterns displayed in the pattern display area are grouped.

- Touch to ungroup the patterns. If there are multiple grouped patterns, the selected pattern group is ungrouped.

The displayed patterns are grouped. The selected pattern group is ungrouped.

Deleting a pattern

1 **Touch DELETE.**

▶ The screen shown below appears.

2 **Touch OK.**

▶ The pattern is deleted.

- To quit deleting the pattern, touch CANCEL.

Note

- If multiple patterns are displayed, only the pattern selected will be deleted.

Editing the Embroidery Pattern (Embroidering Settings Screen)

In the embroidering settings screen, a single pattern can be edited if patterns were not combined or an entire combined pattern can be edited as a single pattern.
In addition, the arrow keys can be used to move the pattern in the pattern editing screen or move the embroidery frame in the embroidering settings screen. Touching these keys moves the embroidery frame.

Rotating the entire pattern

The entire pattern can be rotated.

1 **Touch** ROTATE **.**

▶ The screen shown below appears.

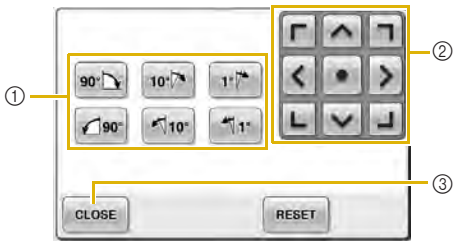

① Enables the entire pattern to be rotated.
② Enables the embroidery frame to be moved.
③ Touch this key to close this screen.

2 **Touch the keys to adjust the pattern to the desired angle.**
(For more details, refer to page 183.)

3 **If necessary, touch the arrow keys to adjust the position of the embroidery frame.**
(For more details, refer to page 99.)

4 **After making the desired changes, touch** CLOSE **.**

▶ The embroidering settings screen appears again.

5

Editing a Combined Pattern

Example)

In this section, we will combine text with floral alphabet pattern, which we will then edit.

1 **Touch** AB.

2 **Select** .

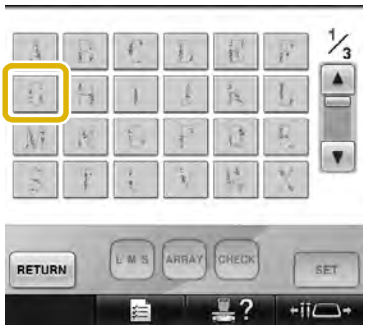

▶ This pattern will be positioned at the center of the embroidery area.

3 **To select the pattern, touch** SET.

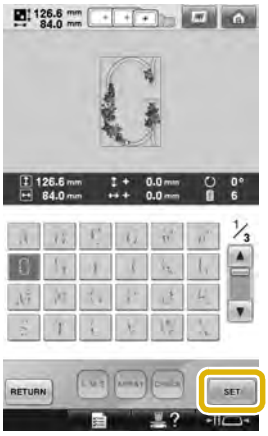

▶ The pattern editing screen appears.

4 **Touch** ADD.

▶ The pattern type selection screen appears again.

5 **Touch** AA.

6 **Touch** ABC.

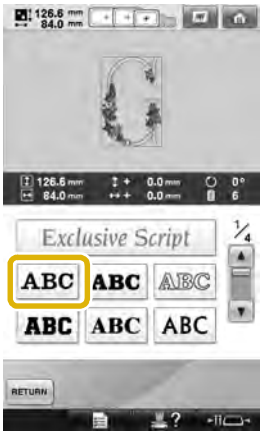

7 **Type "ood".**
Touch the tab for lowercase letters to display the lowercase letters input screen, and then touch "o", "o", then "d".

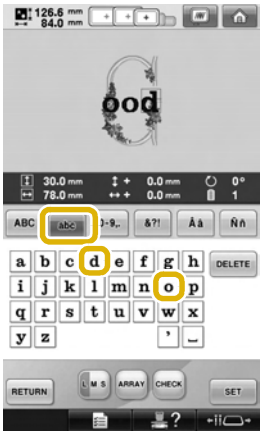

▶ The selected letters appear at the center of the embroidery area.

- To change the size of the pattern, select "o", and then touch L M S to select the desired size.
- To change the text arrangement, touch ARRAY, and then select the desired text arrangement.

8 **After selecting the characters, touch** SET.

▶ The pattern editing screen appears.

9 **Touch** > **and adjust the position of the letters.**

- With a USB mouse, your finger or the touch pen, drag the characters to move them.

10 **Touch** ADD.

▶ The pattern type selection screen appears again.

11 **As before, touch AA.**

12 **Touch ABC to select the same font, and then type "Luck".**

After touching "L", touch the tab for lowercase letters to display the lowercase letters input screen, and then touch "u", "c", then "k".

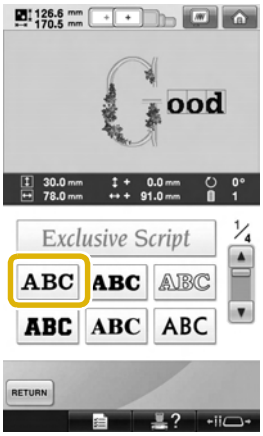

▶ The selected letters appear at the center of the embroidery area.

13 **After selecting the characters, touch SET.**

▶ The pattern editing screen appears.

14 **Touch ⌄ / ⌟ / ⌄ and adjust the position of the letters so that they are well balanced.**

15 **Check the balance of the entire pattern, and, if you wish to edit the pattern, touch ◄ and ► to select the pattern to be edited.**

If a USB mouse is connected, the pattern can be selected by clicking it. Move the mouse to position the pointer over the desired pattern, and then click the left mouse button. In addition, patterns can be selected by directly touching the screen with your finger or touch pen.

Example: To reduce size.

16 **Touch ◄ and ► to move the red frame around .**

17 **Touch SIZE.**

18 **Touch to reduce the pattern proportionately.**

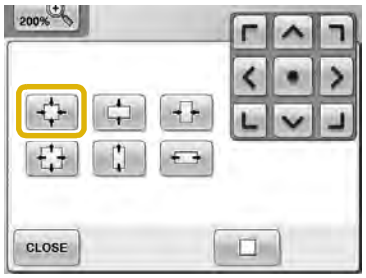

19 **After reducing the pattern, touch CLOSE to return to the pattern editing screen.**

- To adjust other parts of the pattern, touch ◄ and ► again, and then adjust the pattern as desired.

5

- If it is difficult to view the text and the pattern, touch [200%] and then touch [^], [<], [>] or [v] to preview. Touch [200%] again to return to the previous screen.

Memo

- Touch [ ] to group this combined pattern. (Refer to “Editing patterns as a group” on page 202.)

20 **After finishing all editing, touch [EDIT END] and then [SEWING].**

▶ The embroidering settings screen appears.

- To return to the pattern editing screen and continue editing the pattern, touch [EDIT].

Saving Embroidery Patterns

Machine's memory

You can save embroidery patterns that you have customized and will use often, for example, your name or other pattern combinations, patterns that have been rotated or resized, or patterns that have had their embroidering position changed.
A total of about 1.7 MB of patterns can be saved in the machine's memory.

Note

- Do not turn off the machine while the "Saving" screen is displayed, otherwise you may lose the pattern that you are saving.

Memo

- It takes a few seconds to save a pattern in the machine's memory.
- See page 163 for information on retrieving a saved pattern.

1 **With the pattern that you want to save displayed in the embroidery settings screen, touch MEMORY.**

2 **Touch .**

- Touch CLOSE to return to the previous screen without saving the pattern.

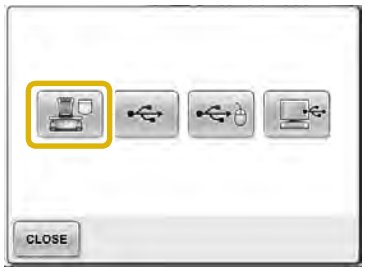

▶ The "Saving" screen appears. When the pattern is saved, the previous screen appears automatically.

If the embroidery pattern cannot be saved

If the following screen appears, the embroidery pattern cannot be saved because either the machine's memory is full or the pattern being saved is larger than the amount of space available in the memory. To be able to save the embroidery pattern in the machine's memory, a previously saved pattern must be deleted.

- To quit saving, touch CANCEL.

5

■ Deleting saved data

1 **Touch DELETE.**

▶ The list of patterns appears.

2 **Select the pattern to be deleted.**
Touch the pattern.

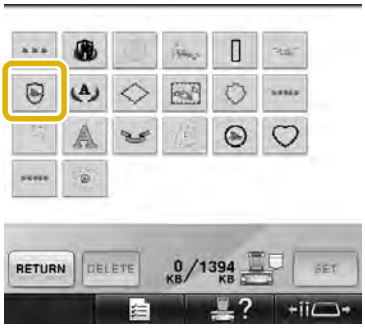

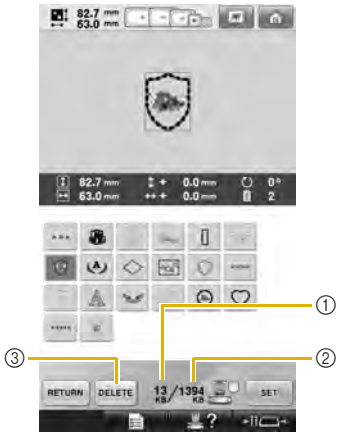

① Shows the amount of memory used by selected pattern.
② Shows the amount of free space in the machine's memory.
③ Touch this key to delete the selected pattern.

- If the wrong pattern was selected or you wish to select a different pattern, touch the desired pattern.

3 **Touch DELETE.**

▶ The screen shown below appears.

4 **To delete the data, touch OK.**

▶ The pattern is deleted, and if there is enough space, the previous screen appears automatically.

- To quit deleting, touch CANCEL.

5 **If there is not enough space, delete another pattern.**

▶ If the embroidery data was saved successfully, the previous screen automatically appears.

- Saving the data takes approximately 10 seconds.

Note

- Do not turn off the machine while the "Saving" message is displayed, otherwise the pattern data being saved may be lost.

■ **Recalling stored patterns**
Refer to the appropriate page of "Selecting an Embroidery Pattern" according to the media being used. (Refer to page 163 for patterns saved on the machine.) (Refer to page 172 for patterns saved on USB media.)

USB media

When sending embroidery patterns from the machine to USB media, plug the USB media into the machine's USB port.

Memo

- Some USB media may not be usable with this machine. Please visit our web site "www.babylock.com" for more details.
- Depending on the type of USB media being used, either directly plug the USB device into the machine's USB port or plug the USB media Reader/Writer into the machine's USB port.
- The USB media can be inserted or removed at any time.

1 **Touch MEMORY when the pattern you want to save is in the embroidering settings screen.**

2 **Insert the USB media into the primary (top) USB port on the machine.**

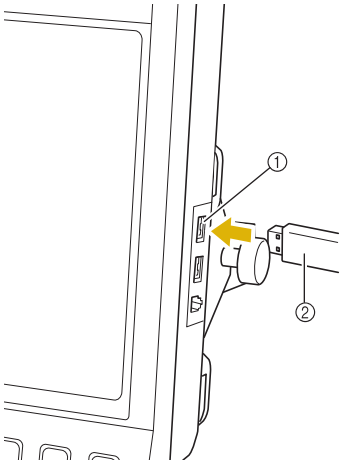

① Primary (top) USB port for media
② USB media

- When connecting the USB Card Reader/Writer to the machine's USB port, be sure to secure the cable with the two hooks on the back panel. If the cable is not secured, the embroidery frame may catch on the cable while the frame is moving, causing the pattern to become misaligned.

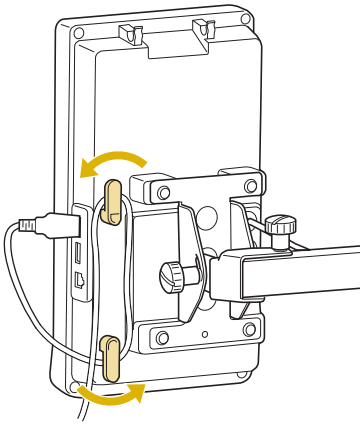

5

Note

- The processing speed may vary by port selection and quantity of data. The primary (top) USB port processes the data faster than the center port. It is recommended to use the primary (top) USB port.
- Two USB media cannot be used with this machine at the same time. If two USB media are inserted, only the USB media inserted first is detected.
- Do not insert anything other than USB media into the USB media port. Otherwise, the USB media drive may be damaged.

3 **Touch** .

- Touch CLOSE to return to the original screen without saving.

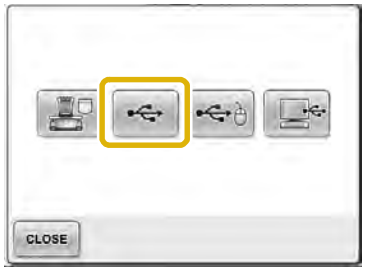

▶ The "Saving" screen is displayed. When the pattern is saved, the display returns to the original screen automatically.

Note

- Do not unplug the USB media while "Saving" is displayed, otherwise the USB media may be damaged or data may be lost.
- Do not unplug a USB device/media from this machine immediately after it has been plugged in. Be sure to wait at least 5 seconds before unplugging the USB device/media.

Computer (USB)

Using the included USB cable, the embroidery machine can be connected to your computer, and the embroidery patterns can be saved in the "Removable Disk" folder in your computer. A total of about 3 MB of embroidery patterns can be saved in the "Removable disk", but the saved embroidery patterns are deleted when the machine is turned off.
Also, this machine is compatible with the Link function, this function enables you to send embroidery patterns edited on a computer to the embroidery machine. (Refer to "Sending Embroidery Patterns From a Computer to the Machine (Link Function)" on page 174.)

Note

- Do not turn off the machine while the "Saving" message is displayed, otherwise the pattern data being saved may be lost.

1 **Plug the USB cable connector into the corresponding USB ports for the computer and for the machine.**

2 **Turn on your computer and select "Computer (My computer)".**

- The USB cable can be plugged into the USB ports on the computer and embroidery machine whether or not they are turned on.

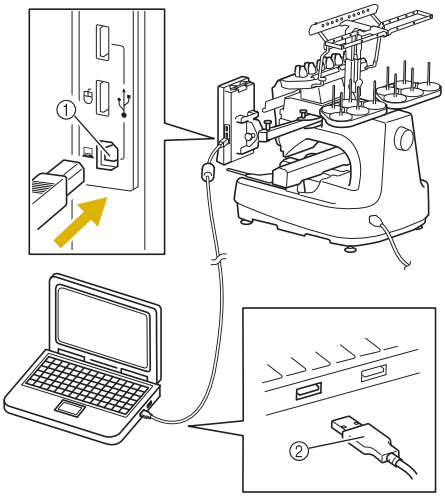

① USB port for computer
② USB cable connector

▶ The "Removable Disk" icon will appear in "Computer (My computer)" on the computer.

Note

- The connectors on the USB cable can only be inserted into a connector in one direction. If it is difficult to insert the connector, do not insert it with force and check the orientation of the connector.
- For details on the position of the USB port on the computer, refer to the instruction manual for the corresponding equipment.

3 **Touch MEMORY when the pattern you want to save is in the embroidering settings screen.**

4 **Touch .**

- Touch CLOSE to return to the original screen without saving.

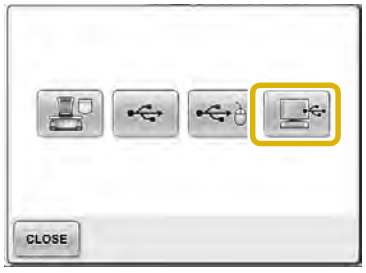

▶ The pattern will be temporarily saved to "Removable Disk" under "Computer (My computer)".

5 **Move/copy the pattern data in "Removable Disk" that you want to save to the computer.**

5

6 BASIC SETTINGS AND HELP FEATURE

This chapter contains descriptions on the use of the settings key, the machine operations guide key and the help key, introduced on page 41. Details on changing the basic embroidery machine settings and viewing operations on the LCD will be provided.

Using the Settings Key 216

Understanding the settings screen 216

Changing the display guides 218

Changing the thread color information 220

Selecting the thread color information for “PES” format data 221

Specifying the thumbnail size 222

Changing the background colors of the embroidery patterns or thumbnails 222

Specifying jumpstitch trimming / “DST” jump codes for trimming 223

Deleting short stitches 224

Specifying the remaining length of thread 225

Changing the screen saver settings 225

Adjusting the brightness of the sewing light 227

Changing the speaker volume 227

Specifying the spool stand LED setting 228

Specifying thread sensor 228

Changing the pointer shape when a USB mouse is used 229

Changing the units of measurements 229

Changing the language 229

Using the Machine Operations Guide Key 230

Using the Settings Key

Touch (settings key) to change many of the basic embroidery machine settings.

Understanding the settings screen

There are five pages in the settings screen. Touch and in the lower-center of the screen until the desired page is displayed. The CLOSE key appears on all pages.

■ Page 1

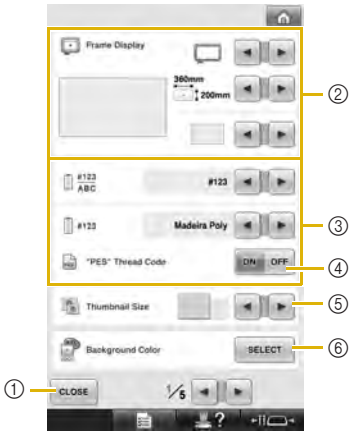

① Touch to quit specifying settings. The settings are confirmed and the screen that was displayed before the settings key was touched appears again.
② The guides (type of embroidery frame holder, embroidery frame size, centerpoint marker and grid) for the pattern display area can be specified. (Refer to page 218.)
③ Changing the thread color display
The color information in the thread color sequence display and the needle bar thread information can be switched to the color name, the thread brand and color number or the sewing time. (Refer to page 220.)
④ "PES" Thread Code
You can display the thread color for "PES" format data according to the machine setting, or setting from the embroidery editing software. (Refer to page 221.)
⑤ Thumbnail Size
Specifies whether the size of image keys that appear when selecting a pattern from the pattern list screen are displayed "Small" or "Large". (Refer to page 222.)
⑥ Embroidery Background Color/Thumbnail Background Color
Depending on the color of the embroidery, changing the background color of the pattern display area and thumbnails may make them more visible and easier to select. (Refer to page 222.)

■ Page 2

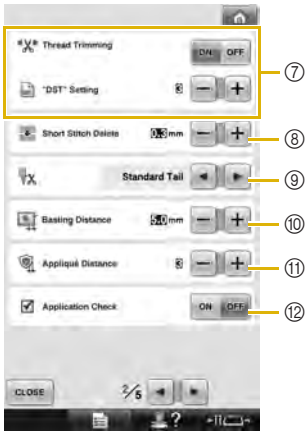

⑦ "DST" Setting
Specifies whether or not jumpstitches are cut. In addition, when using Tajima embroidery data (.dst), you can specify whether or not the thread is cut according to the specified number of jump codes. (Refer to page 223.)
⑧ Short Stitch Delete
Specifies the length of short stitches that are to be deleted. (Refer to page 224.)
⑨ Thread Tail
Specifies the length of upper thread that remains threaded through the needle after the thread is trimmed (length of thread passed through the eye of the needle). (Refer to page 225.)
⑩ Basting Distance
Specify the distance between the pattern and the basting stitching. (Refer to page 126.)
⑪ Appliqué Distance
Specify the distance between the appliqué pattern and the outline. (Refer to page 127.)
⑫ Use the application check when running an application.

Note

- If the settings for "DST" Setting ⑦ or Short Stitch Delete ⑧ are changed from the previous setting, the new settings are only applied to the next embroidery.

■ Page 3

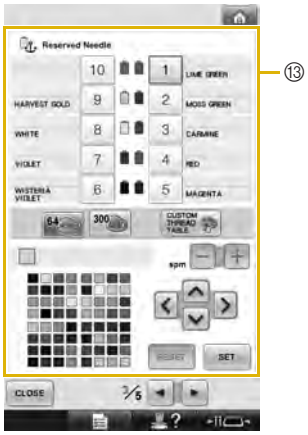

⑬ Reserved Needle
A specific thread color can be set to a needle bar. The specified color remains assigned to the needle bar specified here until the setting is cancelled. You can also specify the maximum sewing speed for a needle bar. This feature is not accessible through the embroidering screen. (Refer to “Reserved Needle Bar and Sewing Speed Settings” on page 145.)

■ Page 4

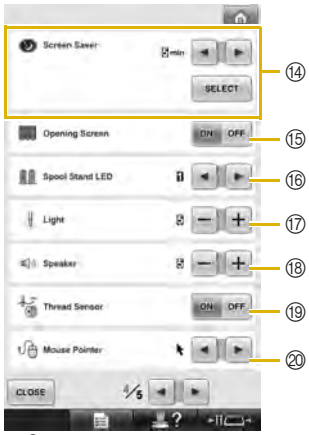

⑭ Screen Saver
Select the length of time until the screen saver appears, and change the image of the screen saver. (Refer to page 225.)

⑮ Opening Screen
The machine can be set so that the opening screen is either displayed (“ON”) or not displayed (“OFF”) when the machine is turned on.

⑯ Spool Stand LED
Specifies the setting of spool stand LED function. Spool stand LED informs when the machine starts sewing, needs changing thread and the error occurs, etc.(Refer to page 228.)

⑰ Light
The brightness of the sewing light can be adjusted. (Refer to page 20 or 227.)

⑱ Speaker
The volume of operation sounds and alarm sounds can be adjusted. (Refer to page 21 or 227.)

⑲ Thread Sensor
Set “Thread Sensor” to either “ON” or “OFF”. (Refer to page 228.)

⑳ Mouse Pointer
Change the shape of the pointer when a USB mouse is used. (Refer to page 229.)

■ **Page 5**

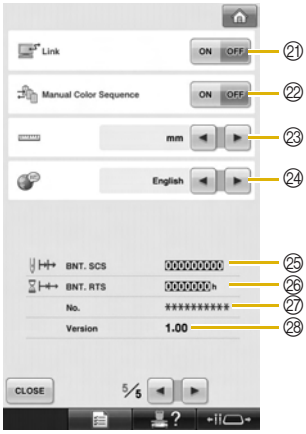

㉑ Link function
Set the Link function on or off. (Refer to "Sending Embroidery Patterns From a Computer to the Machine (Link Function)" on page 174)

㉒ Manual Color Sequence
Set the Manual color sequence on or off. (Refer to "Selecting/Managing Thread Colors for Each Needle Bar (Manual Color Sequence)" on page 132)

㉓ Units of Measure
Enables the units of measurements that appear in the screens to be changed. (Refer to page 229.)

㉔ LANGUAGES
Enables the display language to be changed. The keys and messages appear in the selected language. (Refer to page 229.)

㉕ BNT.SCS (Embroidery Professional Stitch Count System) shows the number of stitches that have been sewn since the machine's last maintenance.

㉖ BNT.RTS (Embroidery Professional Running Time System) shows the amount of time that the machine has been used since its last maintenance.

Use counters ㉕ and ㉖ as a standard for performing periodic maintenance and for receiving maintenance for the machine.

㉗ The "No. ##" is the number for the embroidery machine.

㉘ Version
Shows the version of the software installed on this embroidery machine. (Refer to page 304.)

Note

- Check with your local authorized Baby Lock retailer or at "www.babylock.com" for details on available updates.

Details of each of the settings are described in the following sections. After specifying the desired settings, touch CLOSE to return to the screen that was displayed before the settings screen was displayed.

Note

- Some settings cannot be changed while sewing.

Changing the display guides

The guides in the pattern display area can be set for the desired embroidery frame.
The guide settings can be specified from page 1/5 of the settings screen.

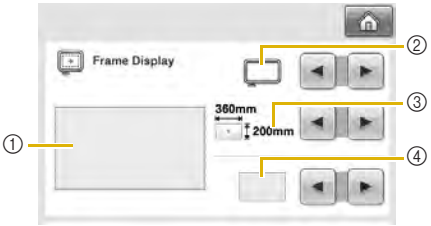

① How the guides will appear with the specified settings can be previewed here.

② Type of embroidery frame holder
Specifies the type of the embroidery frame holder.

③ Area
Specifies the size of the embroidery frame displayed as a guide.
The guides that appears does not indicates the size of the embroidery frame that is actually installed.

④ Centerpoint marker or grid lines
Display or the grid lines or hides the centerpoint marker of the design.

■ **Type of the embroidery frame holder**

Select the type of the embroidery frame holder according to the embroidery frame you want to use.

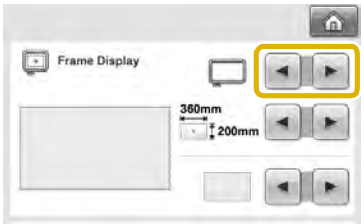

Embroidery frame holder A/B (included)	
Cap frame/Cylinder frame (Optional)	
Embroidery frame holder C (Optional)	

Refer to "Types of embroidery frames/frame holders and their applications" on page 91 to 92.

■ **Size of the embroidery frame**

When the embroidery machine is purchased, the extra-large embroidery frame is selected.

1 **Touch ◄ and ► to select the desired embroidery frame display.**

The embroidering area for the desired embroidery frame is displayed.

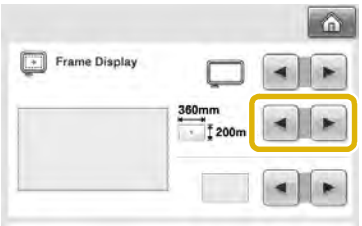

Extra-large embroidery frame/jumbo frame (optional)
200 mm (H) × 360 mm (W) (7-7/8 inches (H) × 14 inches (W))

Extra-large embroidery frame (optional)/flat frame (optional)
200 mm (H) × 300 mm (W) (7-7/8 inches (H) × 11-3/4 inches (W))

Large embroidery frame
130 mm (H) × 180 mm (W) (5-1/8 inches (H) × 7-1/8 inches (W))

Medium embroidery frame
100 mm (H) × 100 mm (W) (4 inches (H) × 4 inches (W))

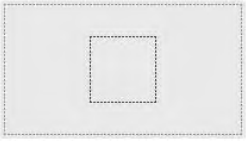

Small embroidery frame
40 mm (H) × 60 mm (W) (1-1/2 inches (H) × 2-3/8 inches (W))

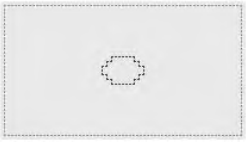

Quilt frame (optional)
200 mm (H) × 200 mm (W) (7-7/8 inches (H) × 7-7/8 inches (W))

Border frame (optional)
100 mm (H) × 300 mm (W) (4 inches (H) × 11-3/4 inches (W))

Cap frame wide type (optional)
60 mm (H) × 360 mm (W) (2-3/8 inches (H) × 14 inches (W))

Advanced cap frame 2 (optional)
60 mm (H) × 130 mm (W) (2-3/8 inches (H) × 5-1/8 inches (W))

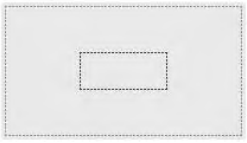

Cap frame (optional)
50 mm (H) × 130 mm (W) (2 inches (H) × 5-1/8 inches (W))

Cylinder frame (optional)
80 mm (H) × 90 mm (W) (3 inches (H) × 3-1/2 inches (W))

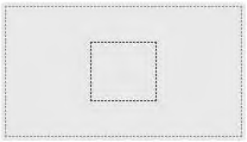

Round frame (optional)
ø 160 mm
(ø 6 inches)

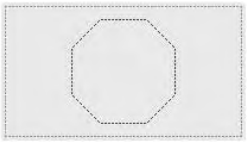

Round frame (optional)
ø 130 mm
(ø 5 inches)

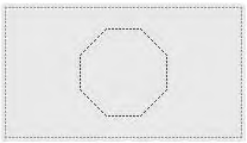

Round frame (optional)
ø 100 mm
(ø 4 inches)

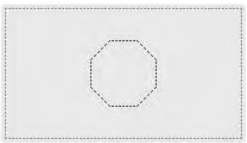

■ **Centerpoint marker and grid lines**

The centerpoint is indicated with a red plus sign (+).
When the embroidery machine is purchased, the centerpoint marker and grid lines are not displayed.

1 **Touch ◄ and ► to select whether or not to display the centerpoint marker and the grid lines.**

The centerpoint marker is displayed as specified.

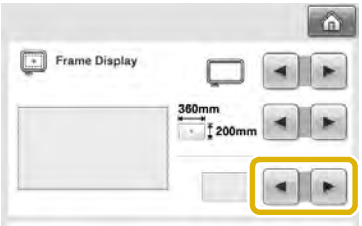

Grid lines

Cross grid lines

Centerpoint marker

Centerpoint marker and grid lines

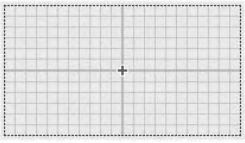

Centerpoint mark with cross grid lines

No centerpoint marker or grid lines

Changing the thread color information

You can display the name of the thread colors, embroidery thread number or the embroidery time.
When the embroidery machine is purchased, the thread color number (#123) is selected.
The thread color display setting can be specified from page 1/5 of the settings screen.

1 **Touch ◄ and ► to display the name of the thread colors, the embroidery thread number or the embroidering time.**

2 **When the thread number [#123] is displayed, touch ◄ and ► to select from six embroidery thread brands pictured below.**

■ **Sample displays**

Thread color number (#123)

Madeira Poly (Polyester)

1848 Madeira Poly	1
1770 Madeira Poly	2
1986 Madeira Poly	3
1637 Madeira Poly	4

Madeira Rayon (Rayon)

1049 Madeira Rayon	1
1369 Madeira Rayon	2
1081 Madeira Rayon	3
1037 Madeira Rayon	4

Sulky (Rayon)

1177 Sulky	1
1176 Sulky	2
1511 Sulky	3
1037 Sulky	4

Robison-Anton (Polyester)

5622 R-A Poly	1
9091 R-A Poly	2
5561 R-A Poly	3
5678 R-A Poly	4

Embroidery (Polyester)

513 Embroidery	1
515 Embroidery	2
807 Embroidery	3
800 Embroidery	4

Country (Cotton*)

444 Country	1
446 Country	2
158 Country	3
149 Country	4

* Depending on the country or area, cotton-like polyester thread is sold.

Thread color name

Name of Color

LIME GREEN	1
MOSS GREEN	2
CARMINE	3
RED	4

Time

Time

2	min	1
1	min	2
1	min	3
1	min	4

Memo

- The thread colors in the thread color sequence display and in the patterns in the pattern display area are displayed in the original thread color (i.e. the thread colors that have been built-in the machine). The thread color numbers are displayed with the number (or the nearest number) for the brand specified here.
- Colors on the screen may vary slightly from actual spool colors.

Selecting the thread color information for “PES” format data

You can display the thread color for “PES” format data according to the machine setting, or setting from the Palette, Palette petite or Palette PTS (embroidery editing software).
(Refer to “Changing the thread color information” on page 220 for the machine setting of thread color.)
The “PES” Thread Code can be selected from page 1/5 of the settings screen.
ON: The thread color information displayed according to the Palette, Palette petite or Palette PTS (embroidery editing software)
OFF: The thread color information displayed according to the machine setting.
When the machine is purchased, “ON” is selected.

Specifying the thumbnail size

You can set whether the thumbnails for selecting an embroidery pattern are displayed in normal size or large size. Large size is 1.5 times the normal size. When the embroidery machine is purchased, normal size is selected.
The thumbnail size setting can be specified from page 1/5 of the settings screen.

1 Touch ◄ and ► to select the desired thumbnail size.

Note

- The thumbnail size will not show a change while in the pattern selection screen. In this case, return to the category selection screen and reselect a pattern category.

Changing the background colors of the embroidery patterns or thumbnails

The background colors of the pattern display area and pattern thumbnails. Depending on the pattern color, select the desired background color from the 66 settings available. Different background colors can be selected for the pattern display area and pattern thumbnails.
When the embroidery machine is purchased, gray color is selected.
The background color settings can be specified from page 1/5 of the settings screen.

1 Touch SELECT.

2 Touch Embroidery Background or Thumbnail Background to select which of the pattern display area or pattern thumbnails you want to change the background color.

Select the background color from the 66 settings available.

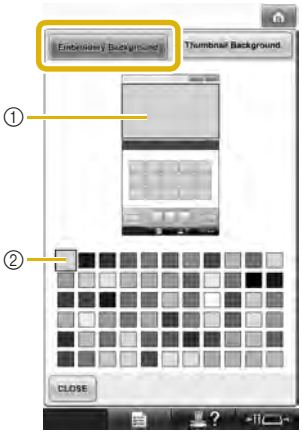

① Embroidery Background colors
② Selected color

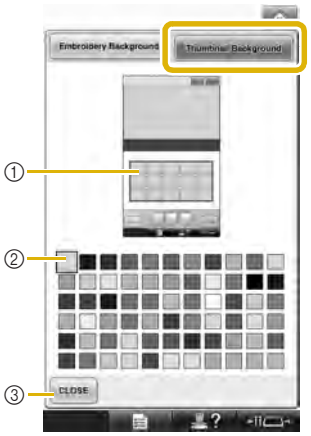

① Thumbnail Background colors
② Selected color
③ Touch CLOSE to return to the settings screen.

Memo

- The setting remains selected even if the machine is turned off.

Specifying jumpstitch trimming / "DST" jump codes for trimming

You can specify whether or not jumpstitches are cut. In addition, when using Tajima embroidery data (.dst), you can specify whether or not the thread is cut according to the specified number of jump codes.
ON: The machine cuts the upper and bobbin thread before the jumpstitch. When Tajima embroidery data (.dst) is used, the machine converts the "jump" code to a trim code, based on the number specified on the next line.
OFF: The machine does not cut either a jumpstitch or the "jump" code in Tajima embroidery data (.dst).
When the machine is purchased, "ON" is selected and the number of jumps is set to "3".
The "DST" thread trim settings can be specified from page 2/5 of the settings screen.

Note

- If the setting is changed from the previous setting, the new setting is only applied to the next embroidery.

1 Touch ON or OFF to select the desired setting.

The key appears as ON OFF when "ON" is selected, and it appears as ON OFF when "OFF" is selected.

- Each touch of the key turns the setting either on or off.

Note

- This setting is not applied to the trimming of threads between characters in alphabet patterns. (Refer to "Trimming the threads between characters" on page 187.)

Memo

- The number of jump codes cannot be specified for data other than Tajima embroidery data (.dst).

■ **When using Tajima embroidery data (.dst)**

2 **If "ON" is selected, touch [+] and [−] to select the number of feed codes.**

The desired setting is displayed.

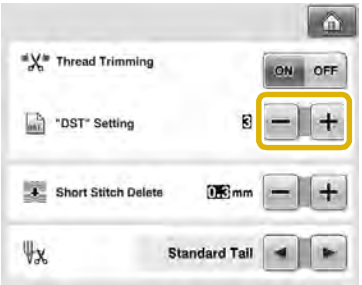

- A value between 1 and 8 can be specified. For example, if 3 is specified, sequential 3 jump codes will be converted to the trim code. But sequential 2 jump codes will not be converted to the trim code, it will be sewed as the feed (jump) stitch.

Note

- You need to set the jump number same as the number that was used when the particular Tajima data was created.
  If the jump number is not matched, either unexpected trim or no trimming at trim expected point will happen.

Deleting short stitches

If embroidery data other than our original patterns are used, the stitch length may be too short, possibly resulting in the thread or the needle breaking. In order to prevent this problem from occurring, the machine can be set to delete stitches with a short stitch length. Stitches with a length less than that specified in this function, can be deleted. When the embroidery machine is purchased, "0.3" was selected (delete stitches with a length of 0.3 mm or less).

1 **Touch [+] and [−] to select the stitch length.**

The desired size is displayed.

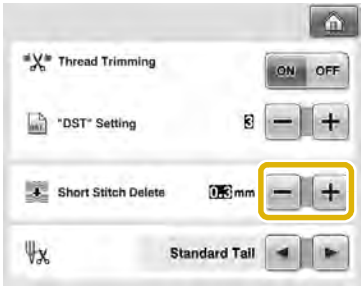

- A value between 0 and 1 millimeters if the units of measurements is set to "mm" (or a value between 0 and 0.04 inch if the units of measurements is set to "inch") can be specified.

Note

- If the setting is changed from the previous setting, the new setting is only applied to the next embroidery.

Specifying the remaining length of thread

This setting specifies whether the length of upper thread that remains threaded through the needle after the thread is trimmed (length of thread passed through the eye of the needle) has a standard tail or long tail.
When the embroidery machine is purchased, “Standard Tail” is selected.
The setting for the remaining length of thread can be specified from page 2/5 of the settings screen.

1 **Touch ◄ and ► to select the setting.**

The desired length is displayed.

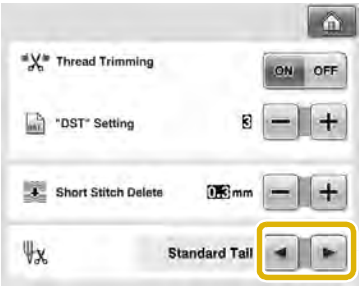

- If the machine misses stitches with a standard length of thread after it is trimmed, select “Long Tail”.
- When using metallic thread, select “Long Tail”.

Changing the screen saver settings

■ **Specifying the length of time until the screen saver is displayed**

The screen saver is displayed when no machine operation is performed for the specified length of time.
A setting between “OFF” (0) and “60” minutes can be set in 1-minute increments.
When the embroidery machine is purchased, “5 min” is selected.
The screen saver settings can be specified from page 4/5 of the settings screen.

1 **Touch ◄ and ► to select the desired setting.**

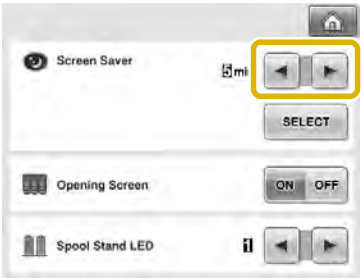

■ **Changing the screen saver image**

You can select your own personal images for the screen saver of your machine.
Before changing the screen saver image, prepare the image on your computer or USB media.
When the embroidery machine is purchased, the default setting is selected.
The screen saver settings can be specified from page 4/5 of the settings screen.

Compatible image files

Format	JPEG format (.jpg)
File size	Max. 150 KB for each image
File dimension	480 × 800 pixels or less, (If the width is more than 480 pixels, the image imported will be reduced to a width of 480 pixels.)
Number allowed	5 or less

Note

- When using USB media, make sure that it contains only your own personal images to be selected for the screen saver.
- Folders are recognized. Open the folder that holds your personal images.

1 **Touch SELECT.**

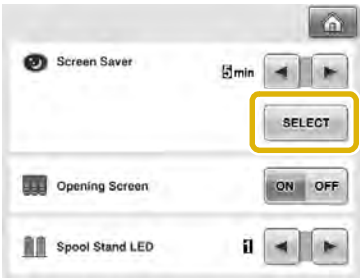

2 **Touch** Customize **.**

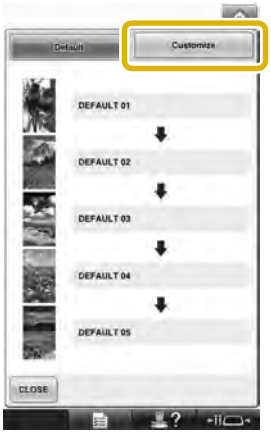

3 **Connect the USB media or the computer (using a USB cable) that contains your personal image to the USB port of the machine.**

- Refer to page 82 about USB connectivity.

4 **Touch** CUSTOMIZE 01 **to select the first image.**

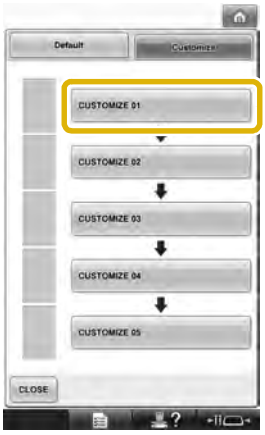

- The images will appear in a list in this screen. Select the desired number to specify the image.

5 **Select the device that is connected.**

- Touch when connecting USB media to the primary (top) USB port.
- Touch when connecting USB media to the center USB port.
- Touch when connecting a computer using a USB cable, and then copy your personal images into “Removable Disk”, which appears on the desktop of the computer.

▶ A list of your personal images appear on the screen.

- Touch DELETE to delete the selected image.
- Touch RETURN to return to the previous screen.

6 **Touch a file name to select image and then touch SET.**

▶ The selected image is stored on your machine.

- Touch RETURN to return to the previous screen.

7 **According to the procedure from step 4, select the remaining images.**

Adjusting the brightness of the sewing light

You can adjust the brightness of the sewing light to light up the embroidering area. The brightness of the sewing light can be set to "OFF" or a setting between "1" and "5". When "OFF" is selected, the sewing light does not turn on. When the machine is purchased, "5" is selected.
The sewing light can be specified from page 4/5 of the settings screen.

1 **Touch − or + to select the desired brightness.**

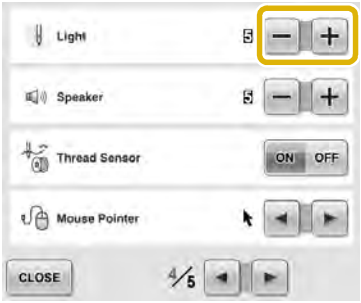

▶ Check that the desired sewing light brightness is selected by checking the embroidering area.

Changing the speaker volume

The volume of operation sounds (which are produced when a key is touched in a screen or a button is pressed in the operation panel) and alarm sounds (which indicate that an error has occurred) can be changed.
The speaker volume can be set to "OFF" or a setting between "1" and "5". When "OFF" is selected, no sound is produced from the speaker. When the embroidery machine is purchased, "5" is selected.
The speaker setting can be specified from page 4/5 of the settings screen.

1 **Touch − and + to select the desired speaker volume.**

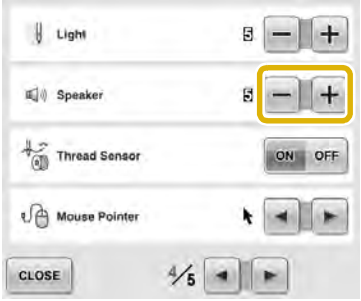

▶ Check that the desired speaker volume is selected with the operation sound produced when a key is touched.

Specifying the spool stand LED setting

The spool stand LED lights inform you when the machine stops, when the thread need to be changed or error has occurred. Set the spool stand LED setting to “OFF”, “1” or “2”.
The spool stand LED setting can be specified from page 4/5 of the settings screen.

1 Touch ◄ or ► to select the desired setting.

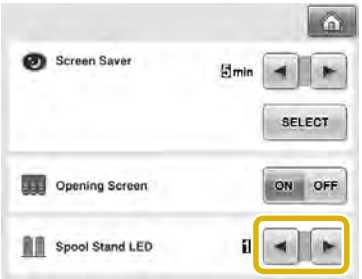

OFF	Turns off the spool stand LED.
1	Spool stand LED turns on in the particular situations; when the machine starts sewing, thread changed, a sewing error occurs, etc.
2	Spool stand LED is always turned on; indicating the thread color and in the particular situation.

■ Spool stand LED indications

x 2→	indicates the spool that needs changing (Appropriate thread color is indicated. For black thread color, LED light turns off.)
x 2 ↔ x 2	indicates the spool that activates thread breakage error
x 2 ↔ **OFF**	sewing error
	finished sewing

Specifying thread sensor

If thread sensor is set to “OFF”, the machine does not stop until embroidering is finished, even if the thread breaks or there is no more thread in the bobbin. Set thread sensor to “ON”, except when it is necessary to set it to “OFF”.
When the machine is purchased, “ON” is selected.
The thread sensor can be specified from page 4/5 of the settings screen.

1 Touch ON or OFF to select the desired setting.

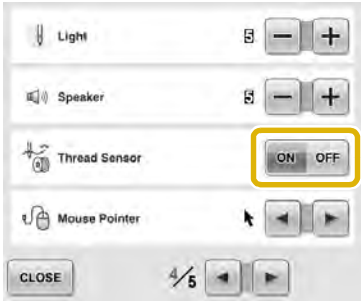

Note

- Normally, set thread sensor to “ON”. When thread sensor is set to “OFF”, the machine will not be able to detect if the upper thread has become tangled. Continuing to use the machine with tangled thread may cause damage.

Changing the pointer shape when a USB mouse is used

The shape can be selected for the pointer that appears when a USB mouse is connected. Depending upon the background color, select the desired shape from the three that are available.
When the embroidery machine is purchased,

is selected.

The mouse pointer setting can be specified from page 4/5 of the settings screen.

1 **Touch ◄ and ► to select the pointer shape from the three settings available (, and).**

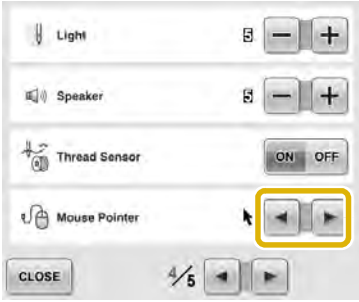

Memo

- The setting remains selected even if the machine is turned off.

Changing the units of measurements

The units of measurements can be set to millimeters or inches.
When the embroidery machine is purchased, "mm" is selected.
The measurement units setting can be specified from page 5/5 of the settings screen.

1 **Touch ◄ and ► to select the desired measurement units.**
The desired units are displayed.

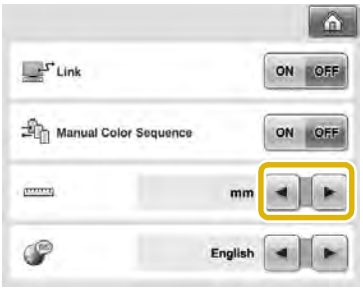

Changing the language

The language setting can be specified from page 5/5 of the settings screen.

1 **Touch ◄ and ► to select the desired language.**
The desired language is displayed.

6

Using the Machine Operations Guide Key

This machine contains information based on the contents of the Operation Manual, such as basic machine operations. Touch (machine operations guide key), and then select from the four topics that appear to display the available information.

■ Contents of Categories

Principal Parts

Displays and explains principal parts of the machine and their functions.

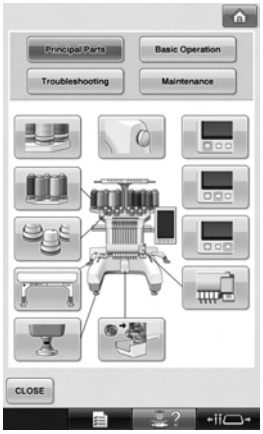

Basic Operation

Illustrates basic threading and hooping instruction.

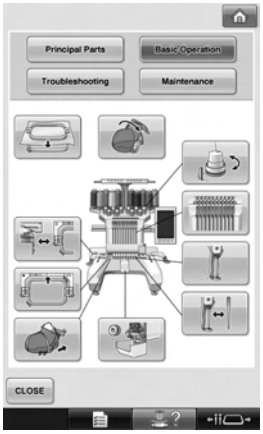

Troubleshooting

Basic guide for problems solving.

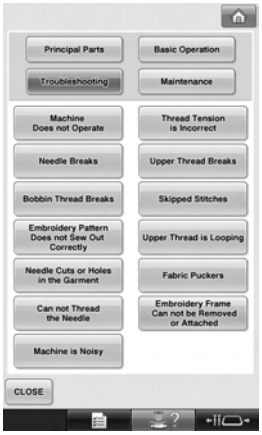

Maintenance

Instruction for maintaining your machine.

Example: To learn how to thread the upper thread

1 **Touch** .

▶ The machine operations guide screen appears.

2 **Touch** Basic Operation .

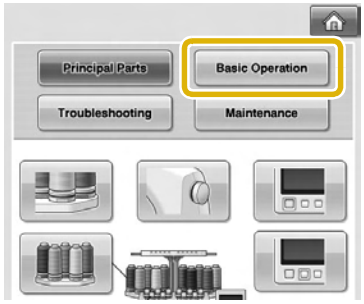

▶ The list of basic operations appears.

3 **Touch** .

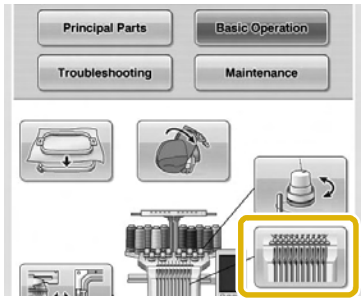

▶ The procedure for threading the upper thread appears.

4 **Touch** ▶ **to display the next page.**

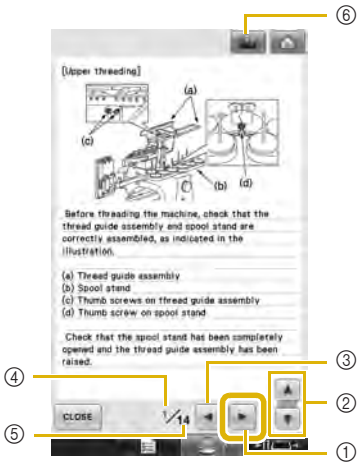

① Next page key
Touch this key to display the next page.
② Balance of information on current topic
③ Previous page key
Touch this key to display the previous page.
④ Current page number
⑤ Total number of pages
⑥ Movie key

Movies are available only for the topics listed below.

- Upper threading
- Threading the needle
- Preparing the cap frame
- Installing the cap frame driver

A movie showing the procedure can be viewed by touching when in the instructional area for the above topics. While a movie is being shown, the key changes to .

6

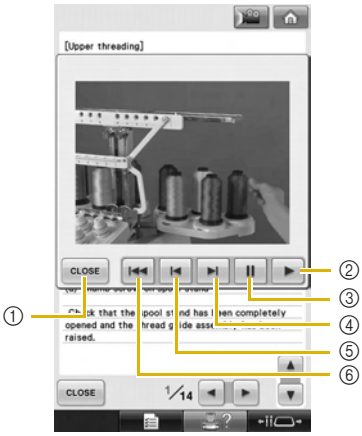

① Touch this key to return to the illustration.
② Touch this key to continue showing the movie.
③ Touch this key to pause the movie.
④ Touch this key to fast-forward the movie.
⑤ Touch this key to rewind the movie.
⑥ Touch this key to display the movie from the beginning of the current page.

5 **After checking the procedure, touch CLOSE.**

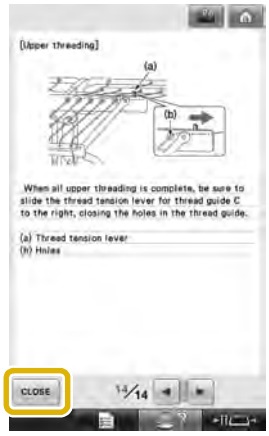

6 **Touch CLOSE.**

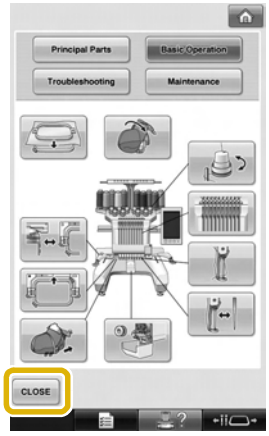

▶ The screen that was displayed before was touched appears.

7

APPENDIX

This chapter provides descriptions of techniques for sewing applications, pointers for creating beautiful embroidery, and details on maintenance procedures and corrective measures that should be taken when a problem occurs.

Appliqué Sewing 234
Sewing appliqué patterns..... 234
Using a frame pattern to create appliqués (1)..... 235
Using a frame pattern to create appliqués (2)..... 236
Sewing Large-size (Split) Embroidery Patterns 238
Helpful Tips for the Operation of the Machine 241
Checking the thread tension of built-in patterns..... 241
Sewing a pattern aligned with a mark on the fabric 242
Color thread table..... 244
Colors of Tajima (.dst) embroidery data 244
Creating Beautiful Embroidery 245
Threads..... 245
Stabilizers (backing)..... 245
Hooping techniques 247
Fabric/stabilizer compatibility chart..... 248
OPTIONAL ACCESSORIES
Embroidery Patterns for the Optional Jumbo Frame 249
Using the Optional Cap Frame..... 253
Cap frame and its accessories 253
Types of caps..... 254
Fabric precautions 255
Preparing to use the cap frame..... 255
Attaching the cap frame..... 261
Installing the embroidery frame holder 269
Additional digitizing information..... 270
Using the Optional Bobbin Winder..... 272
Precautions..... 272
Optional bobbin winder and its accessories 272
Setting up the optional bobbin winder..... 273
Connecting the AC adapter..... 273
Winding the bobbin..... 274
Maintenance..... 277
Cleaning the LCD 277
Cleaning the machine surface..... 277
Cleaning the hook 277
Cleaning around the needle plate..... 278
Cleaning the bobbin case 279
Cleaning the thread paths of the upper threads 280
Oiling the machine..... 282
About the maintenance message... 283
Troubleshooting 284
On-screen troubleshooting 284
Troubleshooting..... 285
Error messages 293
If the machine does not respond when a key is pressed 302
Specifications 303
Embroidery machine specifications..... 303
Upgrading Your Machine's Software..... 304
Upgrade procedure using USB media..... 304
Upgrade procedure using computer 305
Index 307

Appliqué Sewing

This section describes the procedure for sewing appliqués.

Sewing appliqué patterns

Some of the built-in embroidery patterns can be used for sewing appliqués. Follow the procedures described below to sew appliqués using the patterns with “APPLIQUE MATERIAL”, “APPLIQUE POSITION” or “APPLIQUE” in the region display at the top of the thread color sequence display.
*Depending on the thread color display setting, the display may appear as (Appliqué Material), (Appliqué Position) or (Appliqué).

■ Procedure for sewing appliqués

1 **Place stabilizer on the back of the appliqué fabric/material.**

2 **Frame the fabric for the appliqué (from step 1) in the embroidery frame, and then sew an “APPLIQUE MATERIAL” pattern. The line that indicates where the appliqué will be cut out is sewn, and then the machine stops.**

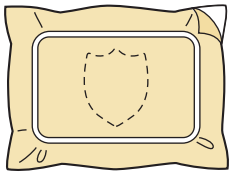

3 **Remove the appliqué fabric from the embroidery frame, and then carefully cut along the sewn cutline.**

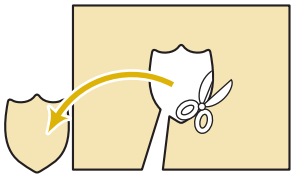

- If the appliqué is cut out along the inside of the sewn cutline, the appliqué may not be correctly attached to the fabric. Therefore, carefully cut out the appliqué along the sewn cutline. If this step is not performed carefully, the appliqué will not be cleanly finished. In addition, carefully remove any excess threads.

4 **Frame the base fabric or garment in the embroidery frame, and then sew an “APPLIQUE POSITION” pattern. The appliqué position is sewn, and then the machine stops.**

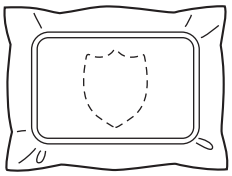

5 **Lightly apply fabric glue or spray adhesive to the back of the appliqué piece that was cut out, and then attach the appliqué piece to the base fabric at the position sewn using the "APPLIQUE POSITION" pattern in step 4.**

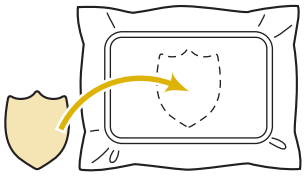

- If an iron-on stabilizer is used to attach the appliqué piece to the base fabric, iron the pieces together without removing the base fabric from the embroidery frame.

6 **After attaching the appliqué piece, sew an "APPLIQUE" pattern. The appliqué is finished.**

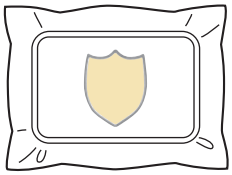

- Depending on the pattern, an "APPLIQUE" pattern may not be available. In this case, sew the appliqué using thread in the color of a part of the embroidery.

7 **Finish sewing the embroidery.**

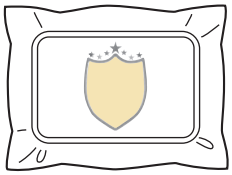

Using a frame pattern to create appliqués (1)

Appliqués can be created by sewing two frame patterns of the same size and shape—one sewn with straight stitches and the other sewn with satin stitches.

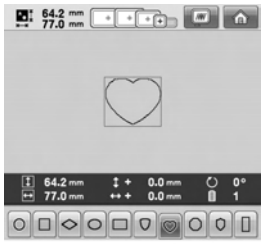

1 **Select a frame pattern sewn with straight stitches to embroider onto the fabric for the appliqué. Carefully cut outside of the stitching.**

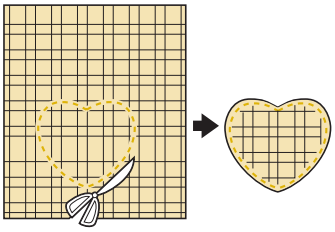

2 **Embroider the same pattern on the base fabric.**

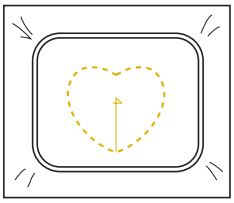

3 **Lightly apply fabric glue or spray adhesive to the back of the appliqué piece that was cut out in step 1, and then attach the appliqué piece to the base fabric.**

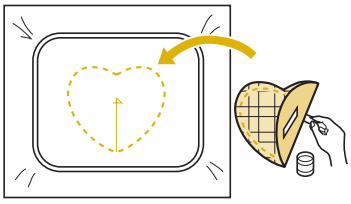

4 **Select the satin-stitched frame pattern with the same shape to embroider the appliqué attached in step 3.**

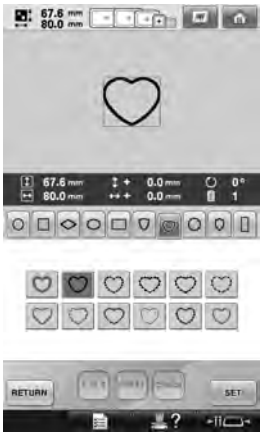

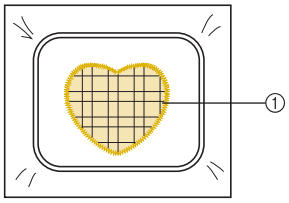

① Appliqué

Note

- If the size or sewing position of the straight-stitched frame pattern is changed, be sure to change the size or sewing position of the satin-stitched frame pattern in the same way.

Using a frame pattern to create appliqués (2)

There is another way of sewing appliqués. With this method, there is no need to change the fabric in the embroidery frame. The appliqué can be created by sewing two frame patterns of the same size and shape—one sewn with straight stitches and the other sewn with satin stitches.

1 **Select a frame pattern sewn with straight stitches to embroider onto the base fabric.**

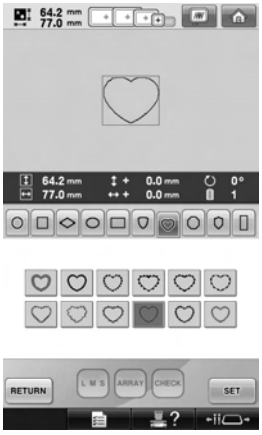

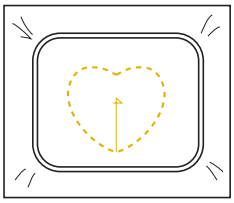

2 **Place the appliqué fabric over the embroidery sewn in step 1. Make sure that the area surrounded by the stitching is not larger than the area of the appliqué fabric.**

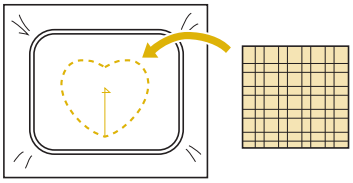

3 **Embroider over the appliqué fabric using the same frame pattern.**

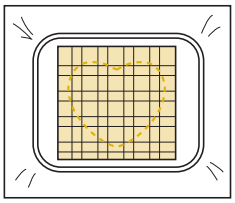

- Be sure to stop the machine before the cross at the center is sewn.

4 **Remove the embroidery frame from the machine, and then cut off the excess appliqué fabric along the outside of the stitching.**

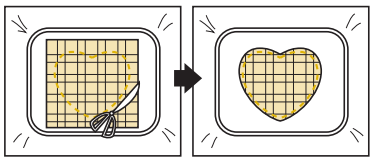

Note

- Leave the fabric in the embroidery frame when cutting off the excess appliqué fabric. In addition, do not apply extreme pressure to the framed fabric, otherwise the fabric could become loose.

5 **Select the satin-stitched frame pattern with the same shape.**

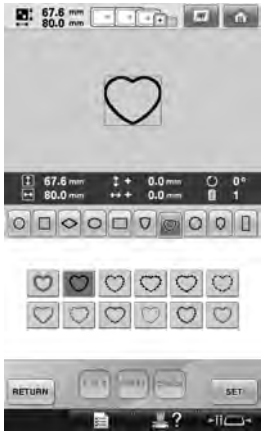

Note

- If the size or sewing position of the straight-stitched frame pattern is changed, be sure to change the size or sewing position of the satin-stitched frame pattern in the same way.

6 **Attach the embroidery frame removed in step 4, and then finish embroidering the appliqué.**

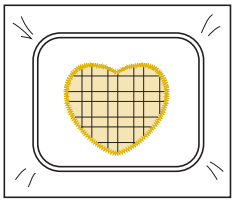

Sewing Large-size (Split) Embroidery Patterns

Large-size (split) embroidery patterns created with Palette Ver.7 or later can be sewn. With large-size embroidery patterns, embroidery designs larger than the embroidery hoop are divided into multiple sections, which combine to create a single pattern after each section is sewn.

For details on creating large-size embroidery patterns and for more detailed sewing instructions, refer to the operation manual included with Palette Ver.7 or later.

The following procedure describes how to read the large-size embroidery pattern shown below from USB media and embroider it.

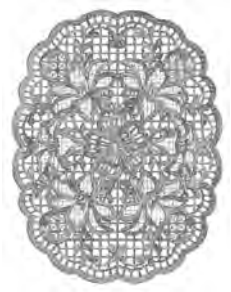

1 Connect to the machine the media containing the created large-size embroidery pattern, and then select the large-size embroidery pattern to be embroidered.

* For details on recalling patterns, refer to “USB media” on page 172.

▶ A screen appears so that a section of the large-size embroidery pattern can be selected.

2 Select section to be embroidered, then touch SET.

- Select the sections in alphabetical order.
- A maximum of 18 sections can be displayed in one page with normal thumbnail size. If there are 19 or more sections in the pattern, touch ▲ or ▼ to display the previous or next page. With large thumbnail size, a maximum of 10 sections can be displayed in one page.

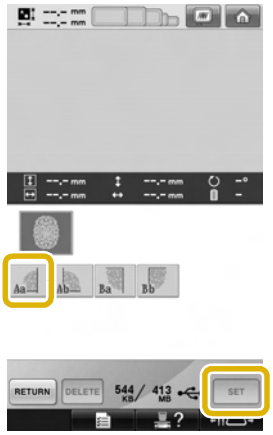

3 **If necessary, edit the pattern. Then, touch EDIT END.**

- For details, refer to “Editing the Embroidery Pattern (Pattern Editing Screen)” on page 179.

4 **Confirm the pattern size, and then select the appropriate fabric and the embroidery frame.**

- Be sure to select fabric of the size of combined pattern.

5 **Hoop the appropriate part of the fabric. In this case, hoop upper-left part of the fabric.**

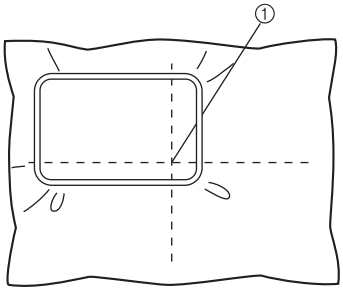

① Center of fabric

6 **Touch SEWING.**

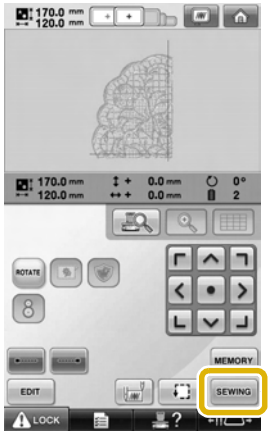

Memo

- The pattern can be rotated to either the left or right when ROTATE is touched.

7 **Touch LOCK, and then press the start/stop button to embroider the pattern section.**

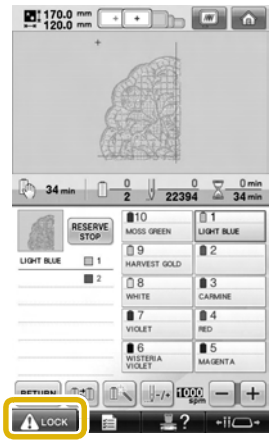

Note

- The last step of the stitching of the pattern section will be an alignment stitching. Use this stitching for placement of adjacent pattern section.

8 **When embroidering is finished, the following screen appears. Touch OK.**

▶ A screen appears so that a section of the large-size embroidery pattern can be selected.

9 **Touch to select the next section of the pattern, and then touch SET.**

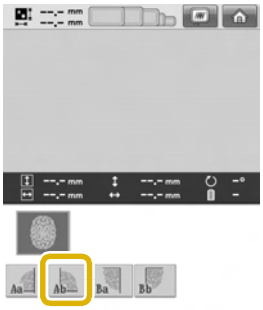

10 **Touch EDIT END, and then SEWING.**

11 **Hoop the fabric for the next design section aligning on the alignment stitching. In this case, align the left side of the hoop on the right side of the design section embroidered in step 6.**

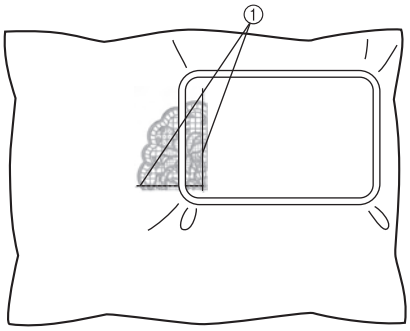

① Alignment stitching

Note

- Make sure that the alignment stitching is completely within the embroidery field. Set the embroidery sheet inside the embroidery frame and align the grid with the alignment stitching for easier placement.

12 **Repeat steps 7 to 10 to embroider and combine the remaining sections of the pattern.**

Helpful Tips for the Operation of the Machine

This section provides descriptions to operations useful in the operation of this machine.

Checking the thread tension of built-in patterns

We will sew this pattern to check the thread tension.

1 Touch .

2 Touch .

3 Touch .

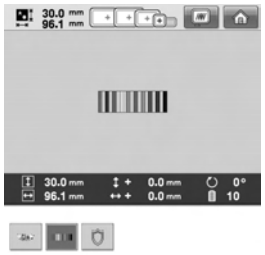

4 Touch .

5 Touch .

6 **Touch LOCK (unlock key), and then press the start/stop button to begin embroidering.**

7 **Correct thread tension. From the wrong side of the fabric, the bobbin thread should be about one third of the stitch width.**

Note

- If adjustment is necessary, refer to instructions on page 68 or 122/123.

Sewing a pattern aligned with a mark on the fabric

By specifying the beginning of stitching and the end of stitching, the exact position of the pattern can be checked.
For example, when sewing text along a line in the fabric pattern, the beginning of the stitching can be set in the lower-left corner so that the position can be checked, and then the beginning of stitching can be reset. Next, the beginning of stitching can be set in the lower-right corner to check the position. The straight line connecting the first point and the second point is the baseline for the text. If the baseline that the text follows leaves the fabric pattern, the embroidering position can be adjusted.

1 **Touch in the embroidering settings screen.**

2 **Set the beginning of stitching in the lower-left corner.**

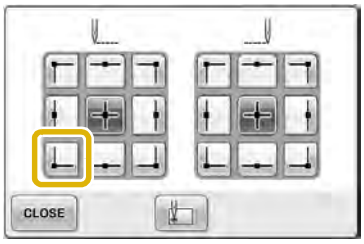

▶ The frame moves so that the needle drop point aligns with the beginning of stitching.

3 **With a fabric marker, mark this point on the fabric.**

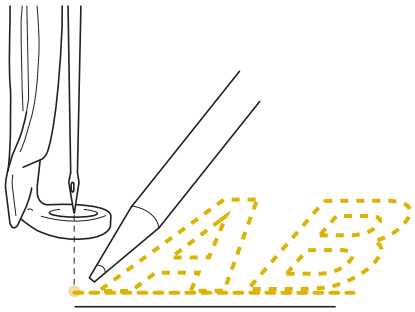

4 **Set the beginning of stitching in the lower-right corner.**

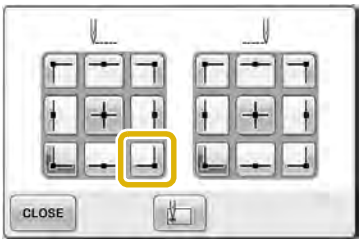

▶ The frame moves so that the needle drop point aligns with the beginning of stitching.

5 **With a fabric marker, mark this point on the fabric.**

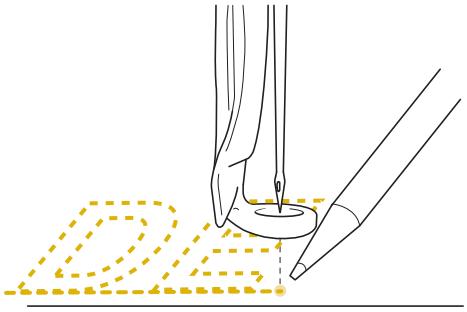

6 **Remove the embroidery frame from the machine, and then connect these two points to check the embroidering position.**

- If the baseline is misaligned or intersects another line, reframe the fabric in the embroidery frame or adjust the position of the pattern.

Color thread table

Additional explanations of the machine's built-in color thread table and the custom thread table are provided below.
Normally, the thread colors in the thread color sequence display and in the pattern display area are displayed in the colors of the machine's built-in color thread table. The thread color numbers with these thread colors are displayed with the thread color number (or the nearest number) for the brand specified on the first page of the settings screen. Therefore, the finished embroidery colors may have a slightly different tinge.
However, since the custom thread table specified on the change thread color screen in the pattern editing screen is created by specifying thread colors by the thread color numbers and color names from individual brands in the machine's built-in color library, the thread table is displayed with those original thread colors.
If pattern colors changed using the custom thread table, pattern can be previewed with colors nearest to the actual embroidered thread colors.
Create color thread tables from the colors of threads that you have and use them to display the patterns in your own thread colors.
(Refer to "Creating a custom thread table" on page 198, and "Choosing a color from the custom thread table" on page 200 for the change thread color function.)

Normal thread color display

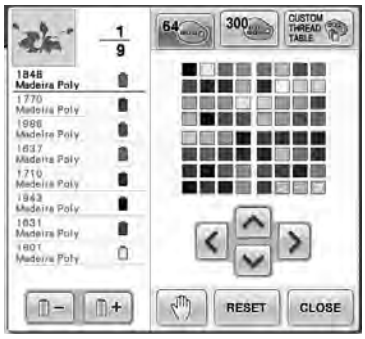

Thread color display using a custom thread

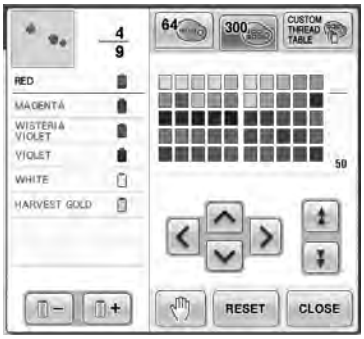

Colors of Tajima (.dst) embroidery data

Tajima data (.dst) does not contain pattern color information. The data is created by combining only shapes.
For example, the following embroidery data appears as shown below in the Tajima format (.dst)

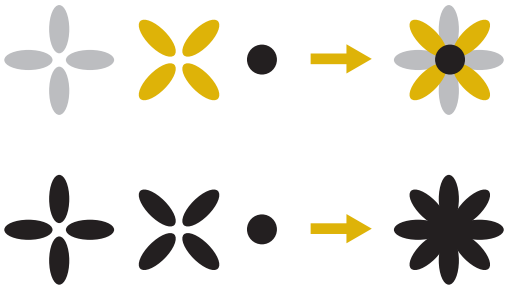

In order for the parts of the pattern to be differentiated when Tajima data is used with this machine, the pattern is displayed with colors automatically applied in the default thread color sequence. Since the thread colors are applied according to the sewing order of the parts, regardless of the design of the pattern, colors may be applied that seem unusual for the design, for example, an orange-colored fruit may be displayed in blue. LED lights, also indicate colors according to the sewing order, which may be not the same thread colors to be sewn.
When using Tajima data, be sure to preview the sewn image on the screen and change the colors from the change thread color screen.
It is recommended to try the Manual color sequence if you use Tajima data very often. Using the Manual color sequence, you can directly change the color setting according to your thread spool setting. Set "Manual Color Sequence" to "ON" in setting screen. (Refer to page 132)

Creating Beautiful Embroidery

The various precautions concerning the thread, embroidery frames and stabilizers (backings) that must be observed in order to create beautiful embroidery are described below.

Threads

Embroidery thread can be costly, therefore caring for it should be a priority. No matter how well a thread is manufactured, it must be appropriately stored if it is to sew properly. This is especially true when one considers the time that lapses between delivery to the thread user and the moment the thread is actually used on the embroidery machine. It is important that embroidery threads be stored in an environment that is free of damaging agents such as excessive heat, light or moisture.

Embroidery threads are best stored in an area that is as clean and dust-free as possible. It is also important that the storage area be free of smoke, fumes and gases. Certain gases may cause the thread to yellow. These fumes originate from such appliances as gas heaters or from gas or diesel engines.

Direct sunlight is also extremely destructive for embroidery threads. Boxes of thread should not be left open and exposed to direct sunlight. If possible, skylights and windows should be diffused. The best type of lighting for embroidery thread is tungsten-filament or fluorescent tubes. It is important to remember that prolonged exposure to these harmful sources may also cause the colors of cardboard boxes and other objects to fade. Temperature and humidity also pose a threat to embroidery threads. The ideal conditions are between 59 °F and 77 °F (or 15 °C and 25 °C). Humidity should be between 40% and 60%. These conditions should be kept as constant as possible in order to prevent mildew from forming. Excessive temperatures can also cause lubrication problems that ultimately result in thread breaks. Damp conditions can affect paper bobbins as the cardboard will swell and the thread can become oversized. It is also important to realize that even if the overall storage conditions are good, there may be “spot problems” where a thread is exposed to a heat source or bright lights. Ensuring that thread does not become damaged requires that stock be frequently rotated and that threads are not left in the same place for an extremely long time.

Choice of thread is a major factor in improving production time. The thread run ability, strength, consistency and weight all affect output. These qualities determine how well the machine will sew and the number of thread breaks during sewing.

Thread breaks have an important influence on production. Each thread break reduces output by at least 0.07% a day (7.5 hours), assuming that it takes 20 seconds to rethread a needle. For every reduction of 14 thread breaks per a day, output can be improved by more than 1.0 %.

Stabilizers (backing)

Backing and topping serve to stabilize and support the product being embroidered so the stitches can be sewn with the least amount of interference or instability. They serve as stabilizers for your embroidery work. Without the proper type of stabilizer, the fabric may move too much within the embroidery frame causing poor alignment of the embroidery. At times, topping will be required in order to manage fabrics with a pile-like surface, such as towels, corduroy and piqué knit. There are many types of backing and toppings with various weights for the various fabrics that you may be sewing.

There are four types of stabilizers (backing) that can be used in embroidery: cut-away, tear-away, water soluble and self-adhesive. In these four types, various weights, sizes and textures are available. When selecting the stabilizer type for a particular fabric, consider the design size in addition to the stitch count and stitch type used in the design.

Finally, make sure that the stabilizer is not stretched. Some backings may not stretch vertically or horizontally but may stretch diagonally. DO NOT USE THESE TYPES. This type of backing will stretch during sewing and may cause the design to shift.

1. Polyester mesh cut-away stabilizer works extremely well with light-colored fabrics since it prevents a shadow from showing through on the front after you have trimmed away the excess. This type of backing is ideal whenever you need stability with a light and soft touch in your finished product, for example, with baby garments.

2. Cut-away stabilizer is excellent for medium- to heavyweight knits, however it can also be used on woven material. It will hold a large number of stitches and with two or three layers can hold a tremendous amount of stitches. This type of backing is also available in black for those who want the inside of their garments to look as good as the outside. Black stabilizer is very useful on similarly colored garments of lightweight fabrics. The black backing is less likely to show through as compared to white backing.

3. Tear-away stabilizer can be used on mediumweight woven fabrics and sturdy fabrics such as canvas, poplin and denim. This stabilizer will hold many stitches especially when used in two or more layers. This type of stabilizer is made of a non-woven material that enables it to easily be torn away from the edges of your embroidery design when it is completed. This stabilizer is also available in black.

4. Water-soluble stabilizer is useful when you need to keep the nap or pile, for example, on towels, from interfering with the placement of stitches. Fabrics such as terry cloth, corduroy, velvet and faux fur are examples of materials that have a nap or pile that can actually penetrate embroidery stitches as your machine sews. The result is an unfinished and often sloppy appearance when fibers of the fabric poke out between the finished stitches of an embroidery design. In these situations, water-soluble stabilizer is used as a topping to hold the fibers of the fabric flat so the stitches can be placed on top neatly and accurately. Water-soluble stabilizer is also used as a backing when stitching lace or other motifs where the desired result is only the stitching. This is accomplished with water-soluble stabilizer, which can easily be pulled off of the fabric after embroidering is completed and any remnants can easily be dissolved with water. Water-soluble stabilizer is also used as a backing on towels, where you often need some stabilization, but any remnants of a formal backing must not be visible in the finished product.

5. Self-adhesive (peel-and-stick) backing is used on those difficult-to-hoop fabrics. This backing is applied (with sticky side up) to the underside of the frame, enabling your fabric to “stick on” the exposed surface in the embroidery area. When the embroidery is finished, the fabric can be removed, the excess backing can be disposed of and the process repeated.

Hooping techniques

"Use the right tool for the right job" is a statement many of us have heard throughout the years. This statement holds true even in the embroidery industry. The wrong size or type of embroidery frame may result in poor design alignment during sewing or damage the product altogether. You can take a perfectly created design and ruin the final results by simply not using the correct frame size, type or technique designed for its application.

■ Frame Basics

Tubular frames: This type of frame allows tubular fabric or pre-assembled garments to be placed around the hook assembly. It allows embroidering of the front of a garment without stitching through the back of it.

Cap frames: These are specialized embroidery frames (hoops) designed to hold caps for embroidering. They are available in a variety of styles for various machines, with two basic styles: one that allows sewing a flattened cap (for use on a flat machine) or one that allows sewing the cap in its natural curved shape (for use on a tubular machine).

Hooping fabric: The framed fabric and backing should be perfectly flat and free of wrinkles or bubbles. If there are bubbles or wrinkles that must be removed, be sure that you pull on the fabric and backing together. Pull no more than is necessary to make the fabric flat and smooth. Overstretching the fabric during this process may cause puckers around the finished design when the frame is removed. Gaps may also be generated between design parts.

Inner/outer frame positioning: There should be a slight ridge (3 mm (1/8 inch)) of fabric and backing below the outer frame on the back side. Tighten the screw only if the inner frame feels loose. Avoid overtightening the screw as this will cause puckers in the fabric and may "strip" the screw.

■ When embroidering thick fabric

If the fabric slips within the frame or cannot be correctly hooped, wrap masking tape or bias tape around the outer frame. The tape will provide resistance so that the fabric does not easily slip.

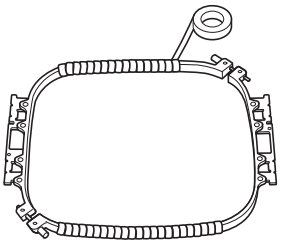

Fabric/stabilizer compatibility chart

Fabric/ Garment	No. of Backing Pieces	No. of Topping Pieces	Comments
Terry cloth	1 tear-away	1 water-soluble	Increase density and/or satin stitch width. Fine details and small lettering tend to get caught in the terry loops.
Satin jacket	Heavy lining: None Light or no lining: 1 tear-away	None	If garment slips in frame, causing alignment problems, wrap inner frame with masking tape or fabric bias tape. This provides a rough surface to grip garment and also helps minimize frame burn.
Cotton sheeting	1 tear-away	None	High-density or highly detailed designs may require more backing. If so, use two pieces of lightweight backing instead of one piece of heavy backing.
Denim	1 tear-away	None	Reduce speed if needle begins to heat up and the thread breaks.
Headwear	Optional	Optional	Change needles more often than usual because the buckram backing dulls needles faster. A lightweight tear-away backing helps reduce thread breaks and regulates thread tension. Use a topping on corduroy or foam cap fronts.
Dress shirt (woven)	1 tear-away	None	High-density or highly detailed designs may require more backing. If so, use two pieces of lightweight backing instead of one piece of heavy backing.
Golf shirt	1 cut-away	Optional	Use topping for designs containing small lettering or a lot of detail, and also for piqué knits.
Canton fleece	1 tear-away	Optional	Use a topping if the garment has a textured surface, such as a basketweave or pronounced twill.
Canvas	1 tear-away	None	Frame tightly.
Corduroy	1 tear-away	1 water-soluble	A higher stitch density or more understitches, as well as a topping, may be necessary to prevent stitches from sinking into the fabric.
Lingerie or silk	1 or 2 lightweight tear-away	Optional	Reduce sewing speed. The thread tension should be low. Use topping for designs with high detail or small lettering. For very fine fabrics, use a thinner thread. Avoid extremely narrow satin stitching on letters or details; instead increase satin stitch width or use a bean stitch. Gently remove (don't pull) backing and topping from garment.
Sweater knit	1 cut-away or adhesive tear-away	1 water-soluble	Use tightly woven organza or curtain fabric in a matching color as a backing for bulky or "holey" knits.
Sweatshirt	1 cut-away or adhesive tear-away	Optional	Highly detailed designs may require two layers of lightweight cut-away stabilizer. Use a topping on extra-thick fabrics or with fine-detail designs.
T-shirt	1 light-weight cut-away or adhesive tear-away	Optional	Use a topping on designs with fine detail or small lettering. Tensions should be light. Avoid stitch-heavy designs.

Note

- Due to the wide variety of fabrics and stabilizers available, the above information should be used as guideline only. If unsure of a particular fabric/stabilizer combination, please sew test a sample prior to the finished garment.

Embroidery Patterns for the Optional Jumbo Frame

Patterns can be created in embroidery editing software version Palette 9 or later to be used with the Jumbo frame (optional).
When a jumbo frame pattern is created in embroidery editing software, the pattern is automatically divided into two sections that can be combined into a single embroidery design when it is sewn with the jumbo frame. When the jumbo frame is used, embroidery with a maximum size of 350 mm × 350 mm (14 inches × 14 inches) can be sewn without having to shift the fabric within the frame.

For details on creating jumbo frame patterns, refer to the Instruction Manual provided with the embroidery editing software version Palette 9 or later.
After the jumbo frame pattern has been created, follow the procedure described below to transfer the pattern to the machine using USB media and begin embroidering.

1 Connect the USB media containing the jumbo frame pattern to this machine, and then select the jumbo frame pattern from the pattern selection screen.

* For details on importing the pattern, refer to "USB media" on page 172.

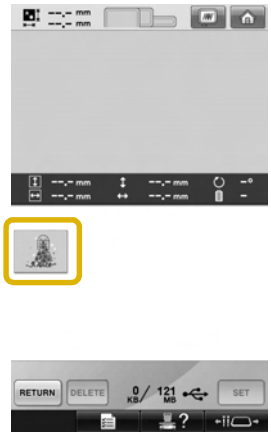

2 Touch to select the first section of the pattern to be embroidered, and then touch SET.

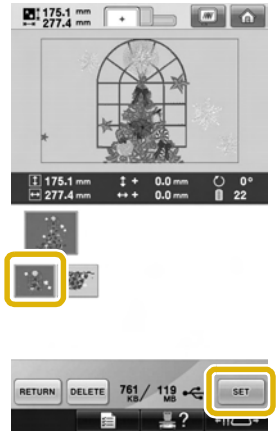

Note

- Before you start sewing the jumbo frame pattern, prepare the optional jumbo frame.
- Contact your authorized retailer for purchasing the optional jumbo frame.

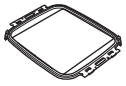

- After hooping fabric or a garment, make sure that the inner frame is lower than the outer frame so that the frame sits flat against the extension table.

3 **Check the size of the pattern, and then hoop fabric that is large enough in the optional jumbo frame.**

* For details on attaching the optional jumbo frame, refer to "Hooping the Fabric" on page 94.

Note

- When hooping the fabric, position it within the embroidery frame so there is at least 10 mm of space to the inside of the frame.

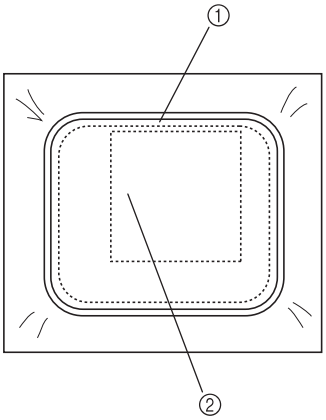

① more than 10 mm (3/8 inch)
② Location where the pattern is to be embroidered

4 **Attach the jumbo frame to the machine.**

5 **Touch SEWING.**

Note

- When you change the embroidering position using the jumbo frame, be sure to be aware of the size of the combined pattern. You cannot change the position exceeding the embroidery area.

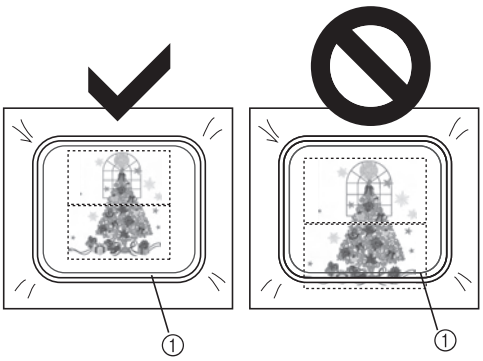

① Embroidery area

6 **Touch LOCK, and then press the start/stop button to start embroidering the first section of the pattern.**

7 **After embroidering of the first section of the pattern is finished, the following message appears. Touch OK.**

8 **An image of the needle location appears in the screen with the positioning detection area framed by a red line. Affix an embroidery positioning sticker so that it fits within the red line, and then touch OK.**

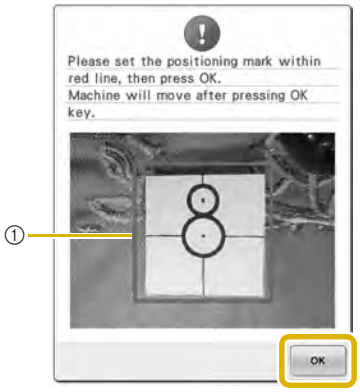

① Red line

- The positioning detection area is under the built-in camera.

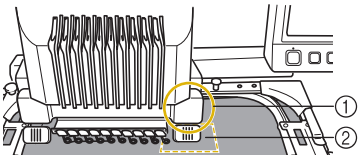

① Built-in camera is in this box.
② Affix the sticker in this area.

9 **When the machine's built-in camera has finished detecting the location of the embroidery positioning sticker, the following message appears.**

Note

- If the built-in camera cannot detect the location of the embroidery positioning sticker, the following error message appears. Touch OK, and then perform the procedure again starting from step 8.

10 **Remove the jumbo frame from the embroidery machine, turn the frame around, and then attach it to the machine.**

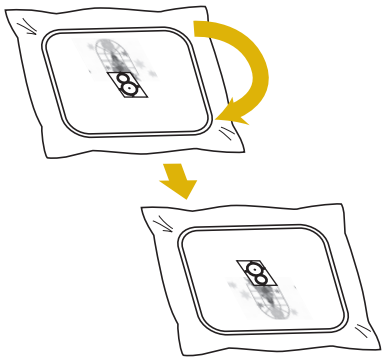

11 Touch OK, then the machine starts to detect the location of the embroidery positioning sticker.

12 When the machine's built-in camera has finished detecting the location of the embroidery positioning sticker, the following message appears. Touch OK.

Note

- If the built-in camera cannot detect the location of the embroidery positioning sticker, the following error message appears. Touch OK, return the jumbo frame to its previous orientation, and then perform the procedure again starting from step 8.

13 Remove the embroidery positioning sticker from the fabric.

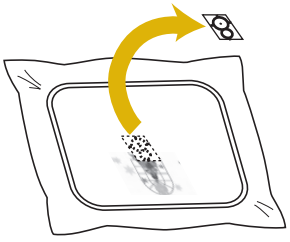

14 Touch to select the next section of the pattern to be embroidered, and then touch SET.

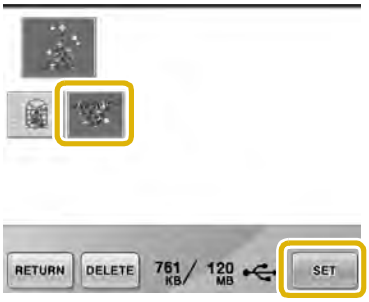

15 Touch SEWING.

16 Touch LOCK, and then press the start/stop button to start embroidering the next section of the pattern.

Using the Optional Cap Frame

By using the optional cap frame, patterns can be embroidered onto caps and hats. The procedures for using the cap frame are described below.

Cap frame and its accessories

The cap frame driver and the mounting jig are required in order to use the cap frame.

Cap frame

① Embroidering area:
60 mm (H) × 360 mm (W)
(2-3/8 inches (H) × 14 inches (W))

② The mark indicates the center of the embroidering area.

③ Snap lock

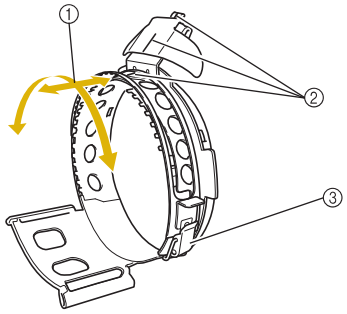

Cap frame driver and 4 thumb screws

In order to attach the cap frame to the carriage, remove the embroidery frame holder, and then attach this cap frame driver to the carriage of the machine.

① Insert the thumb screws into these holes and tighten the screws to secure the movable section. Use these holes when storing this cap frame driver.

② Holding Spring
The cap frame is secured by the two holding Springs.

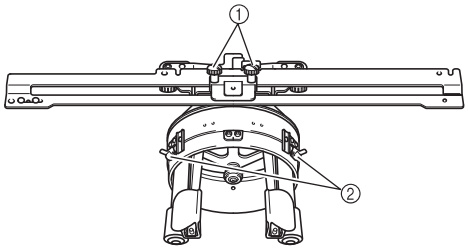

Mounting jig

Use when framing a cap in the cap frame.

① Holders
The cap frame is secured by the three holders.

② Mounting bracket
Tighten thumb screw to secure to mounting surface.

③ Screws
Adjust the size of the mounting jig according to the type of cap being embroidered.

④ Lever
Rotate the cap frame to the location easier to frame the fabric, by pulling the lever.

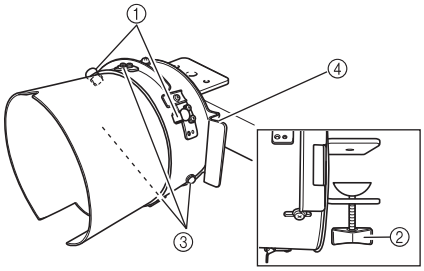

Pad

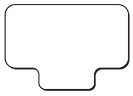

Allen screwdriver (large)

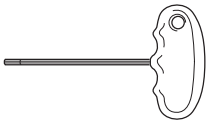

Allen screwdriver (medium)

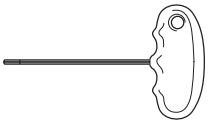

- Use when adjusting the ring of the cap frame driver and the height of the L-shaped bracket. (Refer to page 258.)

Memo

- Before installing the cap frame, be sure to adjust the ring of the cap frame driver and the height of the L-shaped bracket. (If the same machine is being used, this adjustment is only required the first time that it is used. In addition, this adjustment is not necessary if the included cap frame is installed.)
- After the ring of the cap frame driver and the height of the L-shaped bracket have been adjusted, they must be adjusted again if a different machine is being used. The height may differ depending on the machine that is used. For details, contact your Baby Lock retailer.

Note

- If the cap embroidery frame is attached, the embroidery frame indicators, showing which embroidery frames can be used, appear as shown below.

	50 mm (H) × 130 mm (W) (2 inches (H) × 5-1/8 inches (W))
	60 mm (H) × 130 mm (W) (2-3/8 inches (H) × 5-1/8 inches (W))
	60 mm (H) × 360 mm (W) (2-3/8 inches (H) × 14 inches (W))

Types of caps

With the machine, we recommend that the following types of caps be embroidered.

■ Standard (Pro Style)

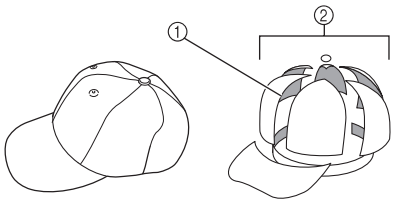

① Face: Pro style
② 6 sections

Otto International, Inc. cap model number (Example)	OTTO27-007	
Mesh backing on the back of front panels (soft or hard)	Constructed firm front	Unconstructed soft crown
Ease of framing (hooping)	Easy (Recommended)	Fairly easy
Backing	1 to 2 ply	2 to 3 ply

■ Low Profile (Low fitting)

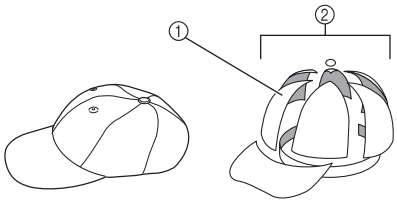

① Face: Low fitting
② 6 sections

Otto International, Inc. cap model number (Example)	OTTO23-225	OTTO18-203
Mesh backing on the back of front panels (soft or hard)	Constructed firm front	Unconstructed soft crown
Ease of framing (hooping)	Very difficult (because the cap material is very hard.)	Fairly easy
Backing	1 to 2 ply	2 to 3 ply

■ **Golf Style**

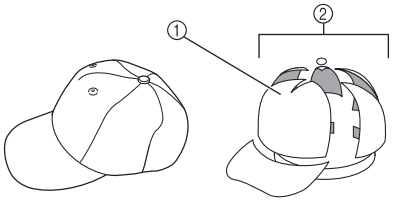

① Face: Not divided
② 5 sections

Otto International, Inc. cap model number (Example)	OTTO37-024
Mesh backing on the back of front panels (soft or hard)	Constructed firm front
Ease of framing (hooping)	Fairly easy
Backing	1 to 2 ply

Memo

- Check if this area ① is covered with mesh.

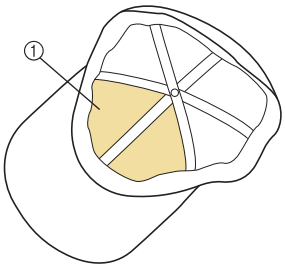

Note

- There is no centerline that can be used as a guide for placing the cap in the cap frame. Before framing the cap, use a charcoal pen to mark the centerline.

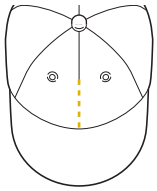

■ **Cap fabric not recommended for embroidering**

- Caps with a front panel that is less than 50 mm (2 inches) high (such as a sun visor)
- Children's caps
- Caps with a brim that is longer than 80 mm (3-1/16 inches)

Fabric precautions

■ **Cap fabric recommended for embroidering**

- 35%Cotton / 65%Polyester
- 100%Cotton
- 80%Wool / 20%Nylon
- 15%Wool / 85%Acrylic

■ **Cap fabric not recommended for embroidering**

If caps of the following types of fabric are used, they will be very difficult to frame, easily wrinkled, or easily shrink.

- Polyester Foam
- Stretch material
- Melton Wool
- 100%Nylon
- Suede

Preparing to use the cap frame

■ **Installing the cap frame driver**

Touch → → → in order to view a video of the operation on the LCD (refer to page 230).

Remove the embroidery frame holder from the carriage on the machine, and then install the cap frame driver. Before removing the embroidery frame holder, remove the embroidery frame. (Refer to "Removing the embroidery frame" on page 69.)

CAUTION

- **Before changing any embroidery frame holder, make sure your machine is turned off.**

1 Loosen and then remove the two thumb screws and the embroidery frame holder.

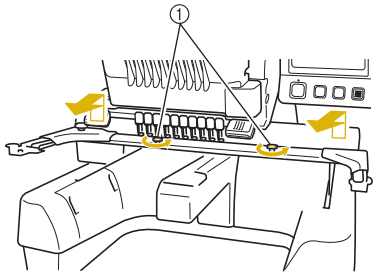

① Thumb screws
- The removed thumb screws remain attached to the embroidery frame holder.

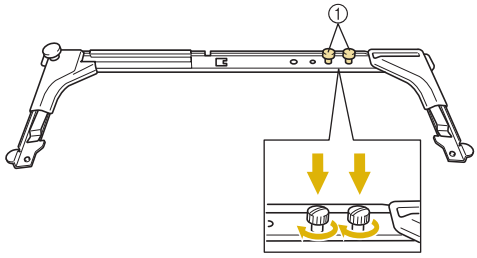

① Put the two thumb screws back in the embroidery frame holder.

2 Remove the two upper thumb screws of the cap frame driver and set aside. Loosen the two lower thumb screws (4 turns).

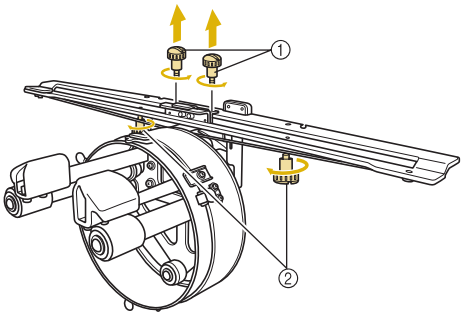

① Upper thumb screws
② Lower thumb screws

3 Pass the machine bed through the ring of the cap frame driver.

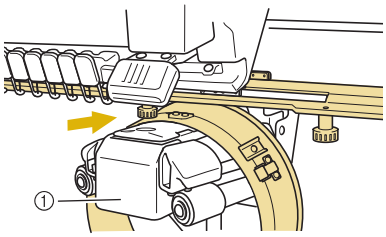

① Machine bed

Note

- Be careful that the cap frame driver does not hit any nearby parts, such as the presser foot.

Attach the cap frame driver to the carriage as described below in steps 4 through 7.

4 **Insert the two thumb screws at the bottom of the cap frame driver into the v-cuts in the carriage, and then place the mounting plate of the cap frame driver on top of the frame-mounting plate of the carriage.**

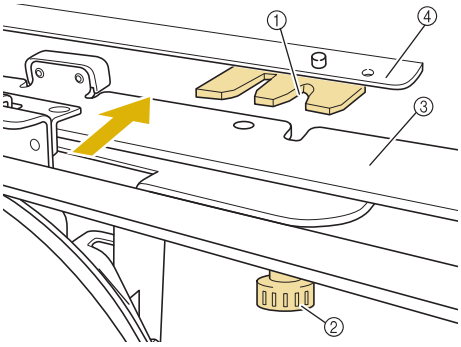

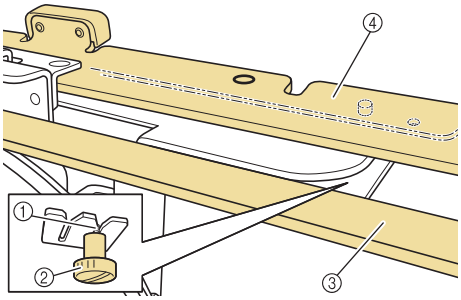

① Notch in the carriage
② Thumb screw of the cap frame driver
③ Mounting plate of the cap frame driver
④ Frame-mounting plate of the carriage

5 **Insert the pins on the frame-mounting plate of the carriage into the holes in the mounting plate of the cap frame driver.**

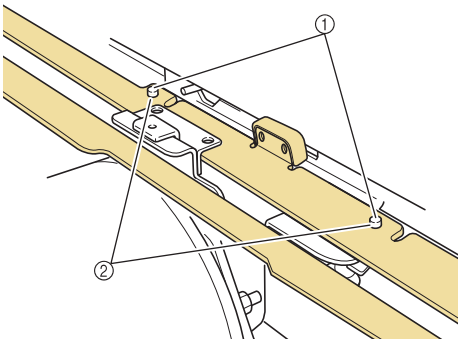

① Pins on the frame-mounting plate of the carriage
② Holes in the mounting plate of the cap frame driver

6 **Insert and tighten the two upper thumb screws in outer holes of mounting plate of cap frame driver.**

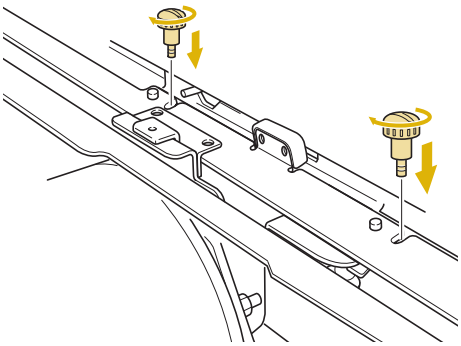

7 **While pushing in the cap frame driver toward the machine so that it is fully inserted, tighten the two lower thumb screws to secure the cap frame driver.**

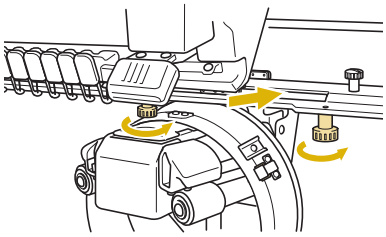

▶ This completes the installation of the cap frame driver.

■ Adjusting the cap frame driver

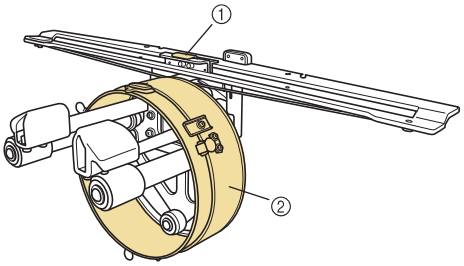

① L-shaped bracket
② Ring

Memo

- If the same machine is being used, the adjustment to the cap frame driver is only required the first time that the machine is used.

1 **Turn on the machine. After the carriage moves to its initial position, turn off the machine.**

Note

- Be sure to adjust the cap frame driver with the carriage at its initial position.

2 **Using the Allen screwdriver (medium), loosen the two hexagonal screws. Loosen the screws only by about one turn.**

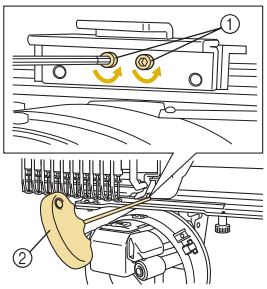

① Hexagonal screws
② Allen screwdriver (medium)

Note

- Do not loosen them too far.

3 **Lower the L-shaped bracket to make it touch the machine bed and then tighten the two hexagonal screws using the Allen screwdriver (medium). Firmly tighten the screws.**

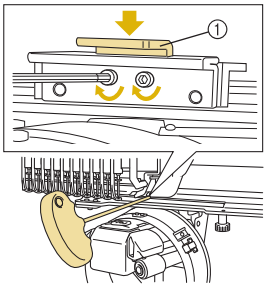

① L-shaped bracket

4 **Using the Allen screwdriver (large), loosen the four hexagonal screws on the inside of the ring. Loosen the screws only by about one turn.**

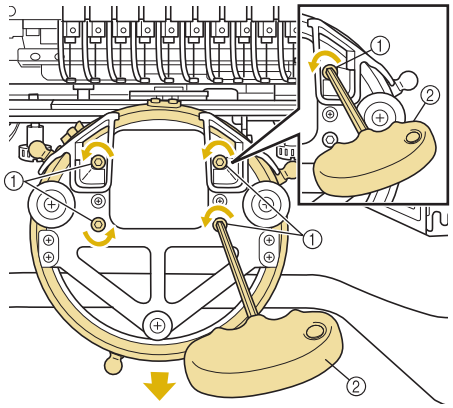

① Hexagonal screws
② Allen screwdriver (large)

▶ When the screws are loosened, the ring can be lowered.

Note

- Do not loosen them too far.

5 **Insert the pad between the machine bed and the ring of the cap frame driver.**

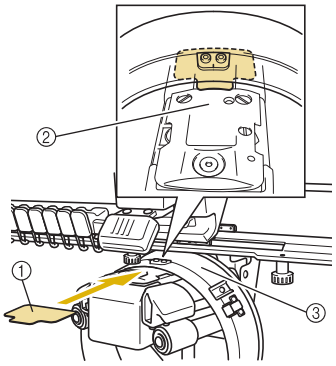

① Pad
② Machine bed
③ Ring of the cap frame driver

6 **Lightly press down the ring, and then use the Allen screwdriver (large) to tighten the four hexagonal screws on the inside of the ring. Firmly tighten the screws.**

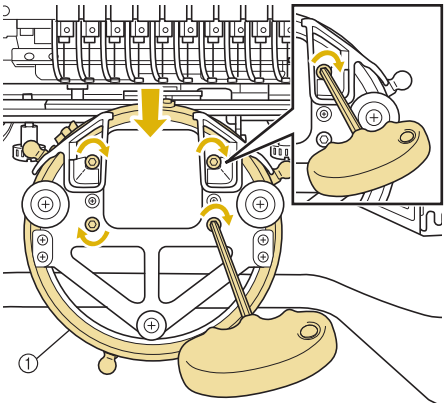

① Ring

CAUTION

- **Make sure that each hexagonal screw is firmly tightened. If any screw remains loosen, injuries may result.**

7 **Remove the pad inserted in step 5.**

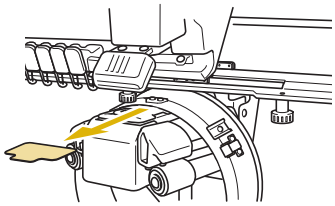

■ **Installing the needle plate spacer**

Attach the needle plate spacer to the needle plate.

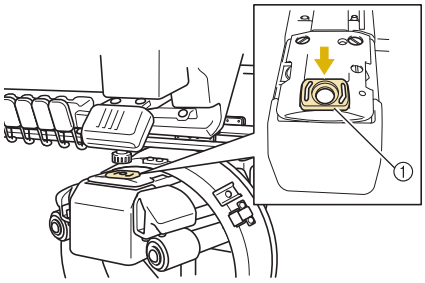

① Needle plate spacer

■ **Preparing the mounting jig**

Attach the mounting jig to a stable surface, such as a desk.

1 **Loosen the thumb screw for the mounting jig to open the mounting bracket so that it is wider than the thickness of the mounting surface.**

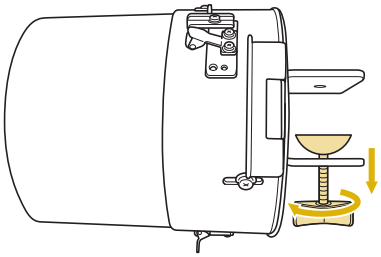

- The mounting bracket can be mounted onto a mounting surface with a thickness from 9 mm (3/8 inch) to 38 mm (1-1/2 inches).

2 **Securely clamp the mounting bracket onto the mounting surface by tightening the thumb screw.**

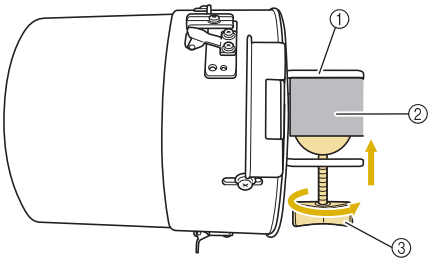

① Mounting bracket
② Mounting surface
③ Tighten thumb screw

Memo

- If there is a gap between the clamp of the thumb screw and the mounting surface, insert the included pad as shown below.

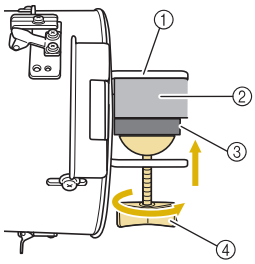

① Mounting bracket
② Mounting surface (worktable, desk, etc.)
③ Pad
④ Thumb screw

3 Check that there is no looseness.
If there is looseness, mount the mounting jig onto the mounting surface again.

Note

- Be sure that the mounting bracket is securely clamped onto the mounting surface and that the thumb screw is firmly tightened.
- Do not attach the mounting jig to an unstable surface (flexible, bent or warped).
- Be careful that the mounting jig does not fall when it is removed.

4 Adjust the size of the mounting jig according to the type (size) of cap being embroidered.

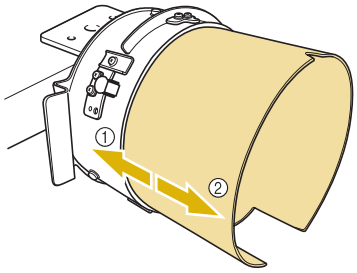

① Low Profile (shorter caps)
② Standard type (taller caps)

■ **For the standard type**
Using a Phillips screwdriver, loosen the three screws (one each at the top and on the left and right sides) on the outside of the mounting jig two or three turns.

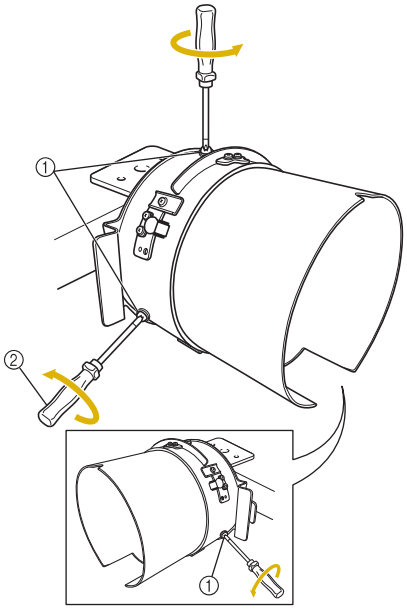

① Screws
② Phillips screwdriver

Note

- Do not remove the three screws (one each at the top, left and right), otherwise they may be lost. Only turn the screws to slightly loosen them.

Pull the mounting jig toward you, and then use the Phillips screwdriver to tighten the three screws (one each at the top, left and right sides).

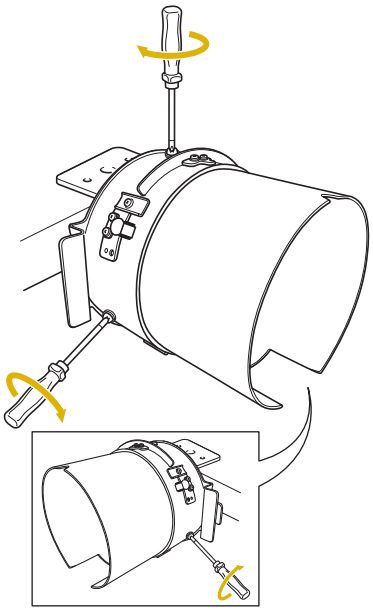

▶ This completes the preparation of the mounting jig.

Attaching the cap frame

Touch → Basic Operation → → in order to view a video of the operation on the LCD (refer to page 230).

Put the cap into the cap frame attached to the mounting jig, and then remove the cap frame from the mounting jig with the cap clamped. Next, attach the cap frame to the cap frame driver on the machine.

■ Attaching the cap frame to the mounting jig and putting a cap into the frame

1 **Attach the cap frame to the mounting jig.**
Slide the cap frame onto the mounting jig, making sure that the notch at the base of the brim holder on the cap frame is aligned with the guide plate on the top of the mounting jig.

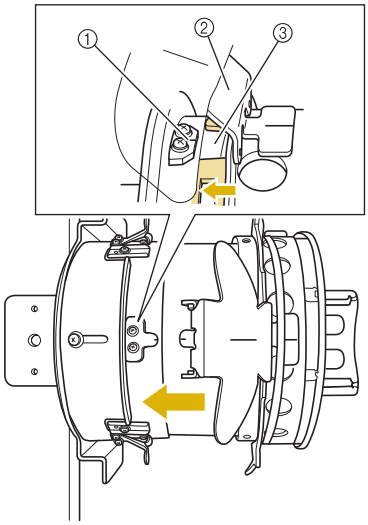

① Guide plate on mounting jig
② Brim holder
③ Notch

2 **With your fingers behind the handles on the left and right sides of the mounting jig, push the cap frame onto the mounting jig by pushing the handles on the left and right sides of the cap frame with your thumbs.**

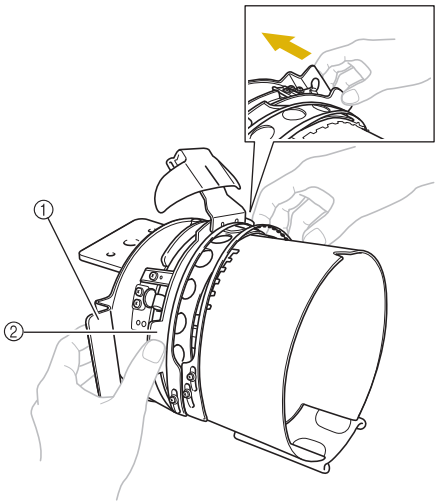

① Handle on mounting jig
② Handle on cap frame

▶ The cap frame is secured when the two holders on the cap frame snap into place.

3 **Release the snap lock on the cap frame by pressing down and then disengage the latch. Open the clamping frame. Also, open brim holder.**

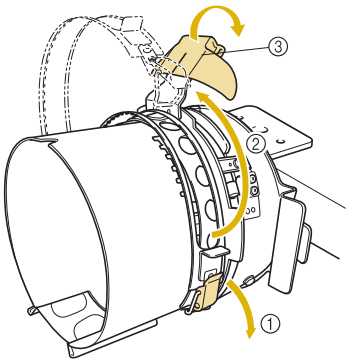

① Snap lock released
② Clamping frame opened
③ Brim holder

4 **Align the center of the stabilizer with the center of the brim holder.**
We recommend a stabilizer size of 100 × 510 mm (4 × 20 inches).

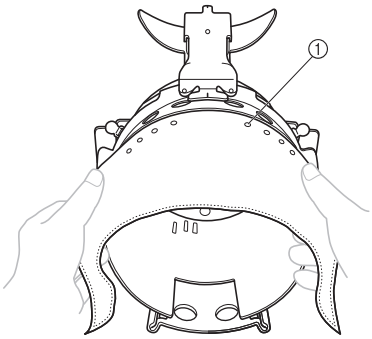

① Teeth
- Make sure that the teeth go through the stabilizer to firmly secure it.

5 **Push both ends of the stabilizer into the holes at the bottom of the cap frame to firmly secure it.**

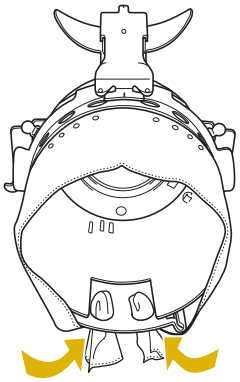

6 **Lift out the sweat guard on the inside of the cap, and then place the cap over the cap frame.**

Using both hands, hold both sides of the cap, and then align the edge of the lower frame with the base of the brim.

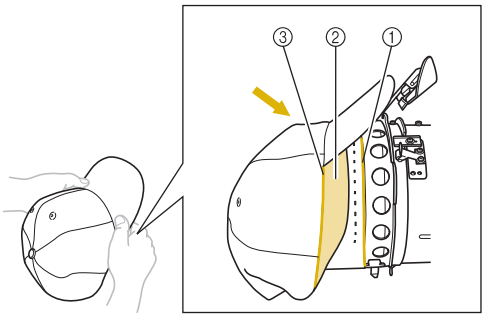

① Edge of the lower frame
② Sweat guard
③ Base of the brim

At the same time, align the center line of the cap with the centerline of the sweat guard holder on the cap frame, and then slide the sweat guard under the sweat guard holder.

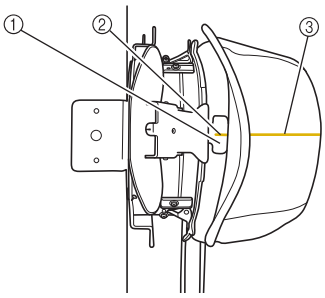

① Sweat guard holder
② Center line of sweat guard holder
③ Center line of cap

7 **Align the center line of the cap with the notch in the mounting jig.**

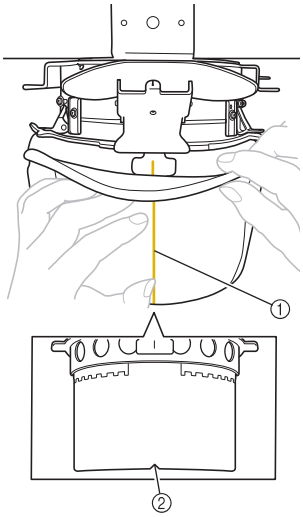

① Center line of cap
② Notch in mounting jig

8 **Before closing the clamping frame, push the ends of the sweat guard into the cap to move them away from the hinge and latch of the clamping frame.**

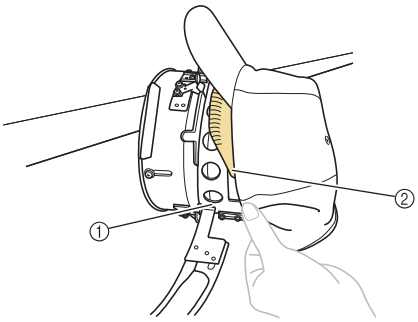

① Hinge of clamping frame
② Fold the sweat guard as shown.

- Neatly folding the sweat guard before closing the clamping frame helps prevent wrinkles in the cap.

9 **Close the clamping frame so that the brim of the cap passes between the inside clamping frame and the outside clamping frame.**

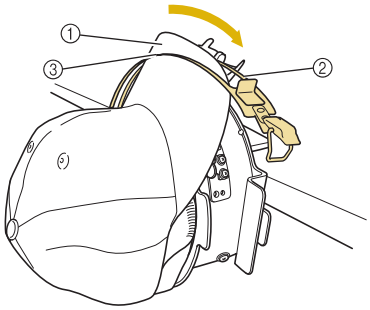

① Brim of the cap
② Inside clamping frame
③ Outside clamping frame

10 **Neatly align the teeth of the clamping frame with the base of the brim.**

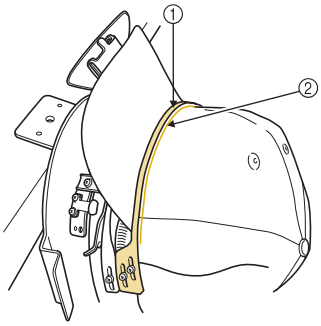

① Teeth of outside clamping frame
② Base of brim

Note

- Loosen the two screws for the outside clamping frame, and then adjust the position of the outside clamping frame so that it conforms to the shape of the cap and so that the teeth of the clamping frame perfectly align with the base of the brim.

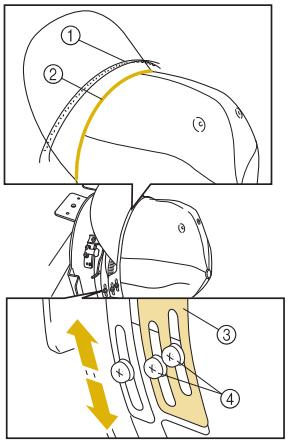

① Teeth of outside clamping frame
② Base of brim
③ Outside clamping frame
④ Screws for the outside clamping frame

11 **Secure the clamping frame with the snap lock. At this time, push the end of the sweat guard into the cap so it does not interfere with the snap lock.**

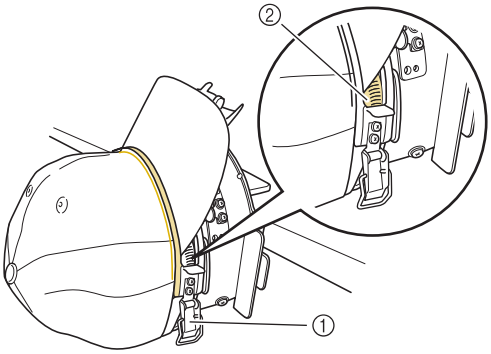

① Snap lock
② Fold the sweat guard as shown.

Note

- Before closing the lever of the snap lock, check that the cap has not moved out of position and that there are no wrinkles. Adjust the cap if necessary.

12 **Close the lever of the snap lock.**

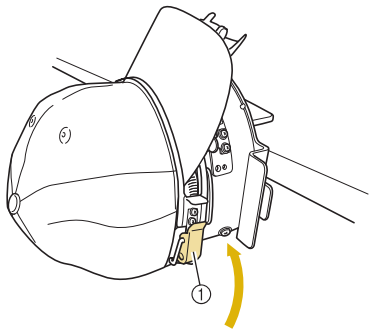

① Lever of the snap lock

Note

- If the cap fabric is thick and the clamping frame cannot be closed, or if the fabric is thin and the cap is too loose within the frame, loosen the screw for the inside clamping frame, and then adjust the inside clamping frame.

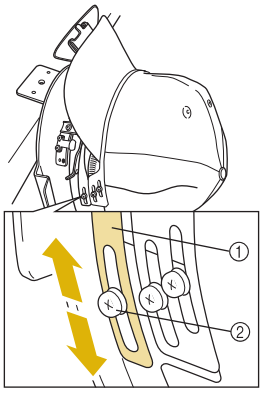

① Inside clamping frame
② Screw for the inside clamping frame

13 **Pull the brim holder up as far as possible, flipping the holder over the cap brim then pushing down on the holder to secure the brim.**

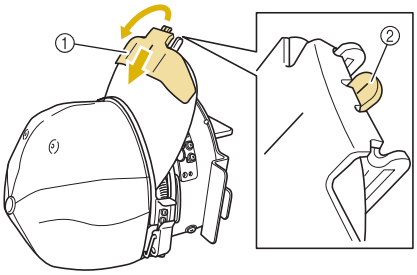

① Brim holder
② Center line of brim holder
- Make sure the notch comes out.

14 **Adjust the brim so that it maintains a rounded shape.**

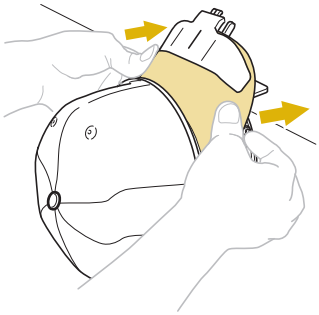

15 **While pulling the lever toward you that is located behind the handle on the right side of the mounting jig, rotate the cap frame to the left. After the cap frame has been rotated 90°, release the lever to lock the cap frame in place.**

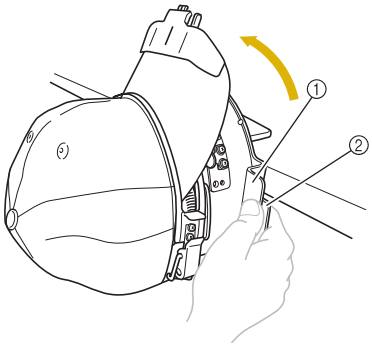

① Handle
② Lever

16 **Pull the ends of the cap out from the center to remove any slack.**

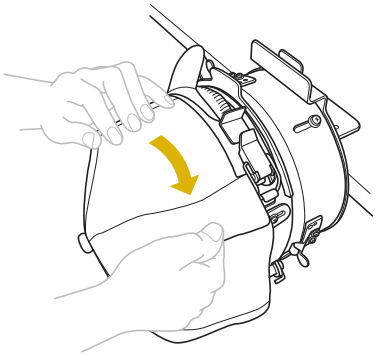

17 **Use the clips to secure the cap.**
Attach the clips with their handles folded inward. If the handles are pointed outward, they may be hit by the machine's presser foot.

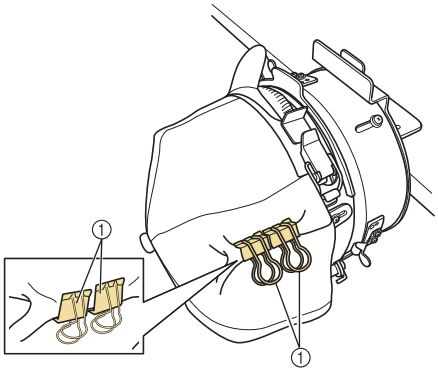

① Clips

18 **While pulling the lever toward you that is located behind the handle on the right side of the mounting jig, rotate the cap frame to the right.**
After the cap frame has been rotated 180° and the brim points to the right, release the lever to lock the cap frame in place.

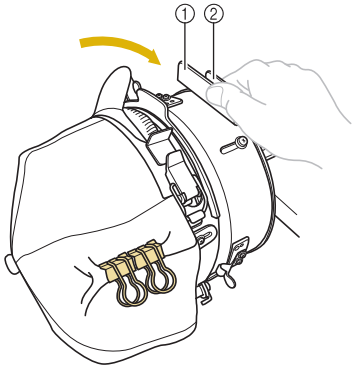

① Handle
② Lever

19 **Pull the ends of the cap out from the center to remove any slack in the same way as the other side.**

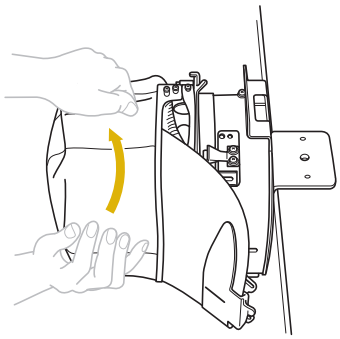

20 **Use the clips to secure the cap.**

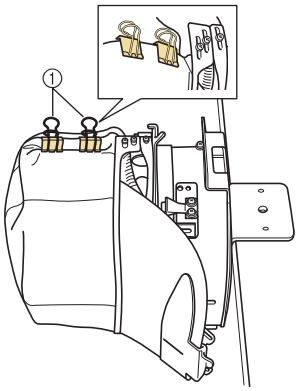

① Clips

- Attach the clips with their handles folded inward. If the handles are pointed outward, they may be hit by the machine's presser foot.

▶ This completes the positioning of the cap in the cap frame.

21 **Return the cap frame to its original position.**

- While pulling the lever behind the handle on the right side of the mounting jig toward you, rotate the cap frame to the left. After the cap frame has been rotated 90° and the brim points up, release the lever to lock the cap frame in place.

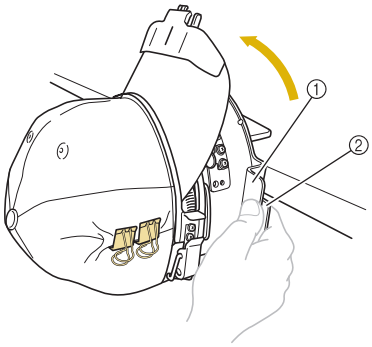

① Handle
② Lever

22 **Remove the cap frame from the mounting jig.**

To remove the cap frame from the mounting jig, place both thumbs on the holders on the mounting jig, grasping the handles on both the right and left side of the cap frame, gently pulling toward you. As shown in the illustration.

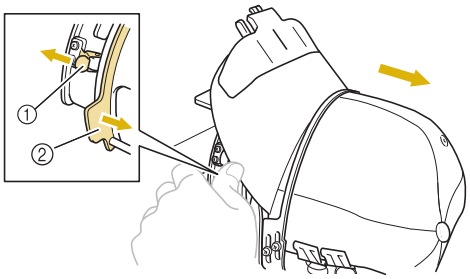

① Holder
② Handle

■ Attaching the cap frame to the embroidery machine

The cap frame driver is required in order to attach the cap frame to the embroidery machine. Before attaching the cap frame to the machine, attach the cap frame driver to the carriage. (Refer to "Installing the cap frame driver" on page 255.)

Before attaching the cap frame, adjust the position of the cap supports to fit the type (size) of cap to be embroidered. To adjust move the cap supports to the front or back depending on the cap size.

1 **Loosen the four screws on the cap supports two or three turns, and then move the cap supports to a position where tension in the cap will be maintained.**

- Do not remove any of the screws, otherwise they may be lost. Only turn the screws to slightly loosen them.

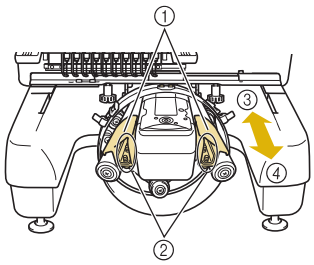

① Cap supports
② Screws
③ Low profile (shorter caps)
④ Standard (taller caps)

- Be sure to adjust both the right and left cap supports to the same position.

2 Attach the cap frame to the cap frame driver.

Turn the cap frame to the left so the brim of the cap does not hit the embroidery machine. Do not insert the cap frame with the brim pointing to the right, otherwise parts of the cap frame may hit the embroidery machine.

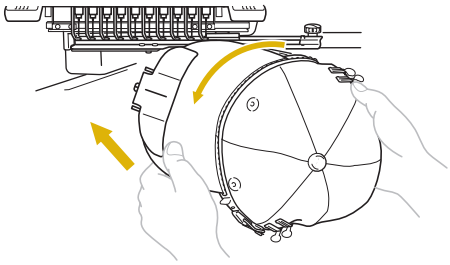

- Be careful that the cap frame does not hit any nearby parts, such as the presser foot.

After turning the cap frame so that the front of the cap faces upward, align the ring of the cap frame with the ring of the cap frame driver. While sliding the cap frame to the left and right, align the notch in the cap frame with the guiding plate on the cap frame driver, and then snap the frame into place.

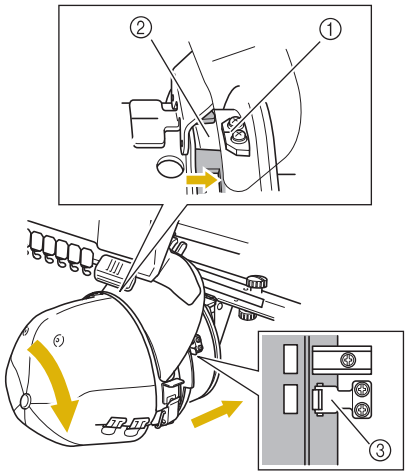

① Guiding plate on cap frame driver
② Notch on cap frame
③ Holder

▶ The cap frame is secured with holders. Make sure that all of the holders on the driver are firmly secured in the frame holes. This completes the installation of the cap frame, and the cap is ready to be embroidered.

■ Removing the cap frame

After embroidering is finished, remove the cap frame, and then remove the cap.

1 Remove the cap frame from the cap frame driver.

Place both thumbs on the cap frame holders, grasping the handles on both the right and left side, gently pulling toward you. As shown in the illustration.

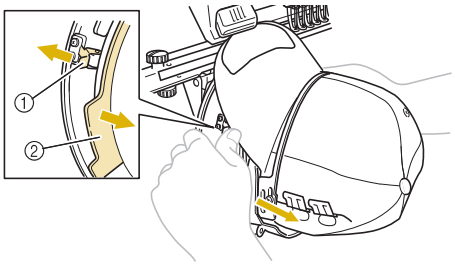

① Holder
② Handle

Before removing the cap frame, turn it to the left so that the brim of the cap does not hit the embroidery machine.

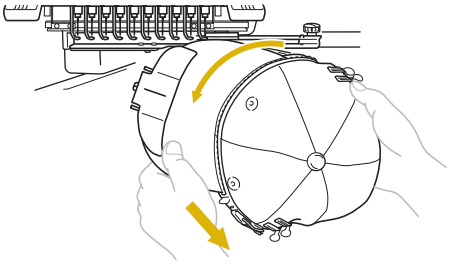

- Be careful that the cap frame does not hit any nearby parts, such as the presser foot.

2 After removing the brim holder, unlock the snap lock of the clamping frame, remove the clips, and then remove the cap.

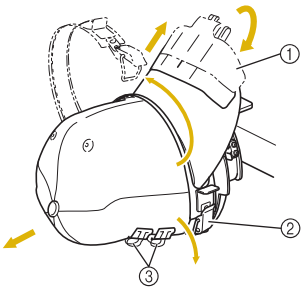

① Brim holder
② Snap lock
③ Clips

Installing the embroidery frame holder

After embroidering using the cap embroidery frame is finished, remove the needle plate spacer and cap frame driver, and then re-attach the embroidery frame holder.

1 Remove the needle plate spacer.

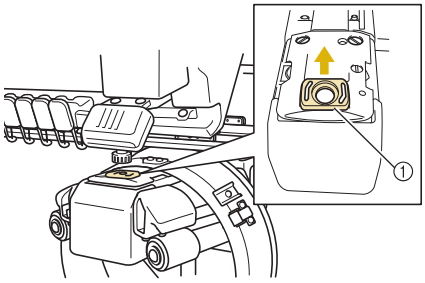

① Needle plate spacer

2 Loosen the two lower thumb screws.

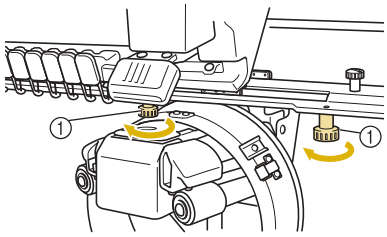

① Thumb screws

3 Remove the two upper thumb screws

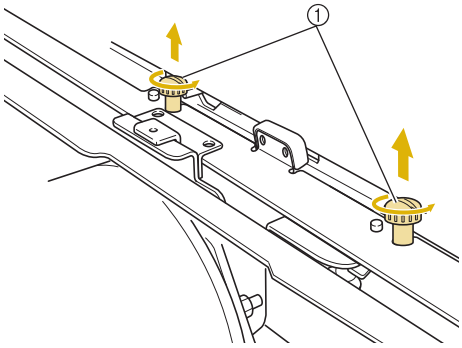

① Thumb screws

4 Remove the cap frame driver.

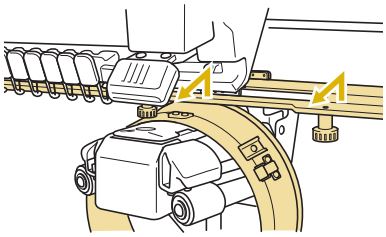

Note

- Be careful that the cap frame driver does not hit any nearby parts, such as the presser foot.

5 With the hole on the sweat guard holder aligned with the centerline of the guiding plate, insert the two thumb screws removed in step 3 into the holes at the top, and then tighten the thumb screws.

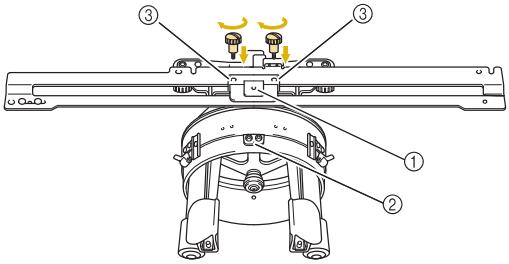

① Hole on the sweat guard holder
② Centerline of guiding plate
③ Holes on the top

- Insert the thumb screws into the holes where the cap frame driver that was originally installed (holes that the thumb screws were removed from in step 2 on page 256).

▶ The movable section of the cap frame driver is secured.

6 **Align the holes on the embroidery frame holder with the pins in the frame-mounting plate of the carriage.**

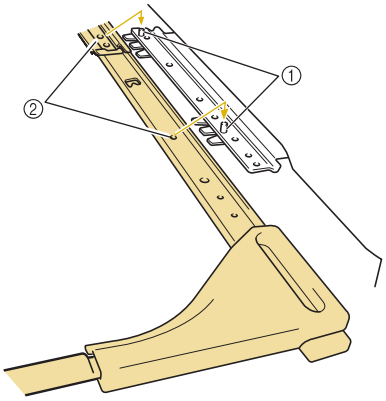

① Pins in the frame-mounting plate
② Holes on the embroidery frame holder

7 **Secure the embroidery frame holder with the two thumb screws.**

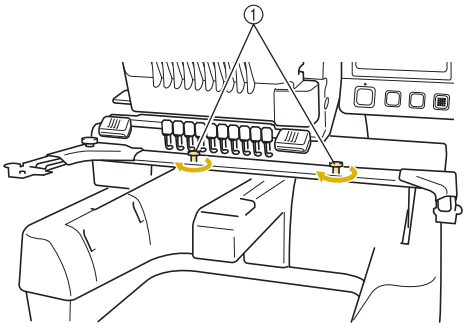

① Use the thumb screws included with the machine (thumb screws removed in step 1 on page 256).

CAUTION

- **Using the disc-shaped screwdriver included, firmly tighten the thumb screws.**

Additional digitizing information

When creating a pattern for embroidering with a cap frame, pay attention to following points in order to avoid registration problems (misalignment of gaps in the pattern).

1 **Sew underlay stitches.**

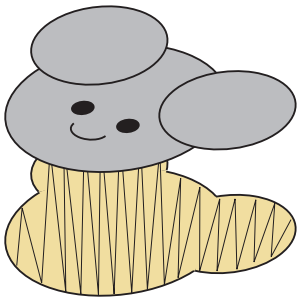

2 **Start the embroidery pattern from the center, and sew toward the ends.**
With the machine, the order in which patterns are selected when they are combined is the order in which they will be sewn. For the following example, select the patterns in the order "E"→"A"→"B"→"R" to make the combined pattern "BEAR".

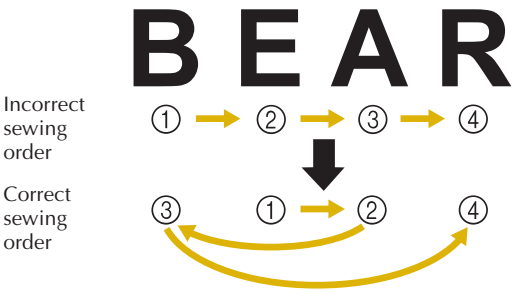

Note

- Do NOT sew from one end to the other, otherwise wrinkling or shrinking may occur.

3 **When sewing outlines of patterns, make sure that the stitch width of the satin stitching is at least 2 mm, and that the stitching overlaps the fabric by at least 1 mm. Also, make sure that there are no jumps of long stitches in the outlining on each region or letter.**

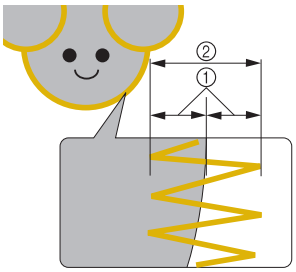

① At least 1 mm
② At least 2 mm

CAUTION

- **Don't sew more than four overlapping layers.**

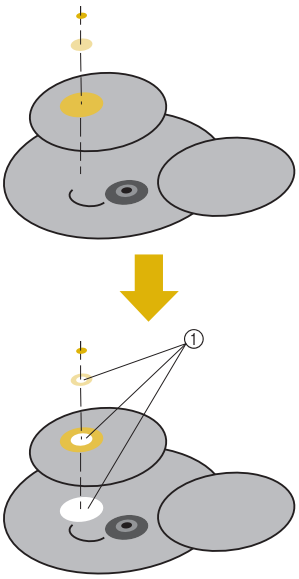

① Specify that overlapping areas not be sewn.

Using the Optional Bobbin Winder

When winding the bobbin thread onto a metal bobbin, use the optional bobbin winder. The procedures for using the optional bobbin winder are described below.

Precautions

For precautions concerning the power supply, refer to page 34.

CAUTION

- **Be sure to place the bobbin winder on a level, stable surface.**
- **Only use the bobbins supplied with this bobbin winder.**

Optional bobbin winder and its accessories

Check that the following bobbin winder and accessories are included.

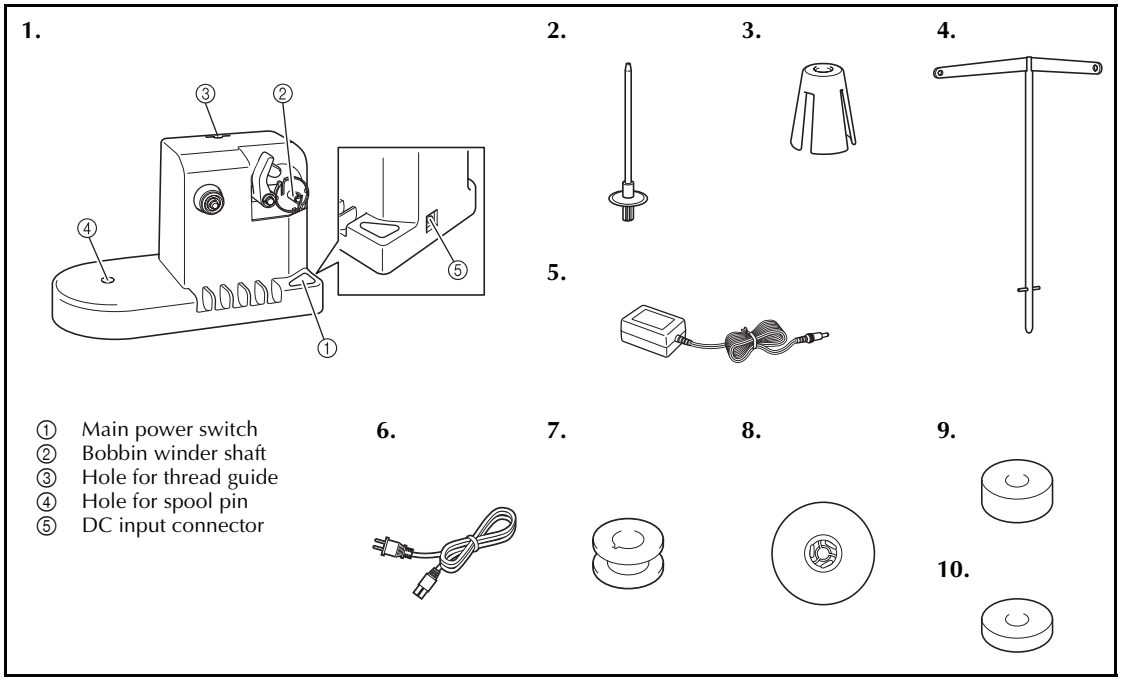

No.	Name	Part Code	No.	Name	Part Code
1	Bobbin winder	EPBW1	6	Power supply cord	LN2284-001
2	Spool pin	XC5949-051	7	Metal bobbin × 5	100376-053
3	Spool cushion	XA0679-050	8	Spool cap	130012-054
4	Thread guide	XC6644-151	9	Weight (L)	XC5974-151
5	AC adapter	XE9695-001	10	Weight (S)	XC6631-051

Memo

- The part code of the bobbin winder set may differ depending on the country/area where the machine was purchased.

Setting up the optional bobbin winder

Attach the spool pin, spool cushion and thread guide to the bobbin winder.

1 **Insert the spool pin and the spool cushion.**
Lower the holder, and then insert the spool pin straight into the hole. And insert the spool cushion.

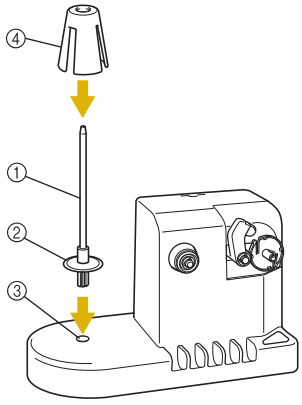

① Spool pin
② Spool pin holder
③ Hole for spool pin
④ Spool cushion

2 **Insert the thread guide.**
Insert the thread guide straight into the hole with the pins on the thread guide aligned with the notches on the sides of the hole.

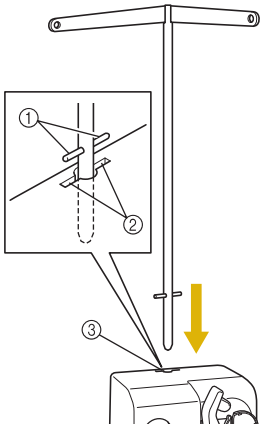

① Pins on thread guide
② Notches on hole for thread guide
③ Hole for thread guide

- Firmly insert the thread guide as far as possible and make sure that it is secure.

Connecting the AC adapter

1 **Insert the plug of the power supply cord into the AC adapter.**

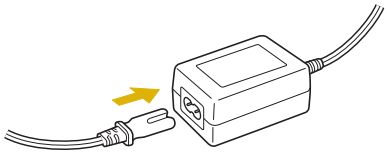

2 **Plug the cord on the AC adapter into the DC input connector of the bobbin winder, and then insert the plug of the power supply cord into a household electrical outlet.**

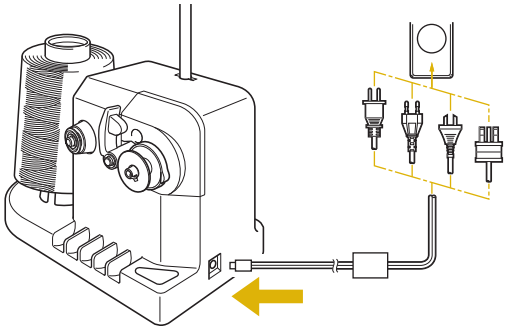

- Be sure to firmly insert the plug on the AC adapter into the DC input connector of the bobbin winder.

CAUTION

- **Be sure to use the included power cord. Using any other power cord may result in damage.**
- **Be sure to use the included AC adapter. Using any other AC adapter may result in damage.**
- **Before connecting or disconnecting the AC adapter, be sure that the unit is not operating.**
- **After using the bobbin winder, disconnect it from the electrical outlet.**

Winding the bobbin

Prepare the bobbin and the spool of bobbin thread. Use cotton or spun polyester bobbin thread (from 74 dtex/2 to 100 dtex/2).

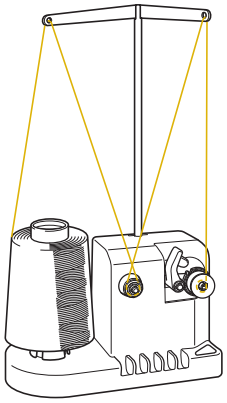

1 **Align the groove in the bobbin with the spring on the bobbin winder shaft, and set the bobbin on the shaft.**

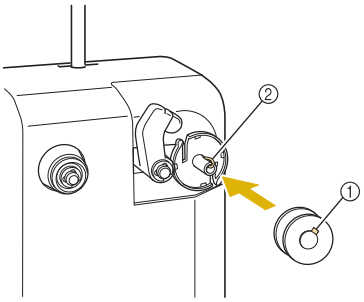

① Groove in the bobbin
② Spring on the shaft

2 **Set the thread spool on the spool pin.**

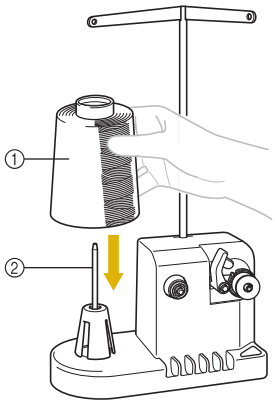

① Thread spool
② Spool pin

Note

- When using a small spool, remove the spool cushion and set the spool directly onto the spool pin. Also use the included spool cap to keep the small spool stable.

3 **Pass the thread through the hole in the left of the thread guide toward the front of the winder.**

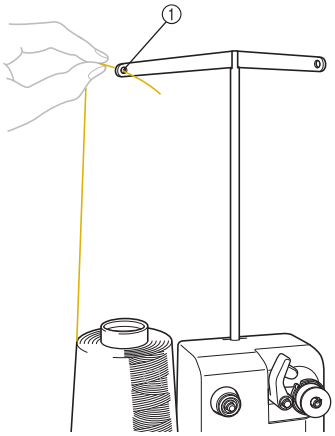

① Hole in the thread guide

4 **Pass the thread around the tension disc as shown in the illustration. Make sure that the thread is correctly fed into the tension disc.**

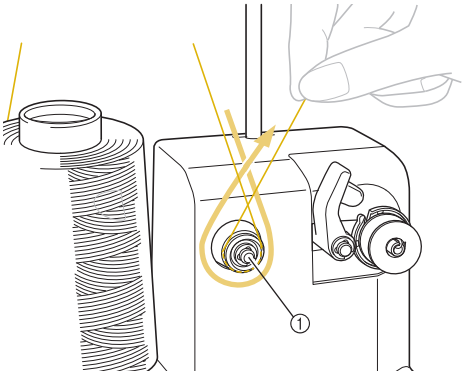

① Tension disc

5 **Pass the thread through the hole in the right of the thread guide toward the back of the machine.**

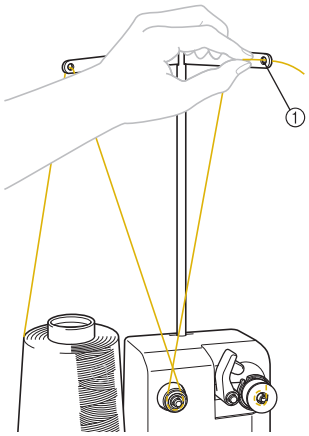

① Hole in the thread guide

6 **Wind the thread clockwise around the bobbin 4 or 5 times, as shown in the illustration.**

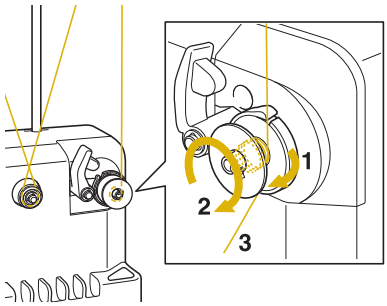

7 **Pass the end of the thread through the guide slit in the bobbin winder seat, and pull the thread. The cutter will cut the thread.**

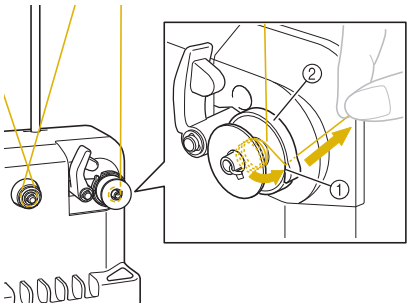

① Guide slit
② Bobbin winder seat

Note

- Be sure to follow the procedure described. If the bobbin is wound without the thread being cut with the cutter, when the bobbin thread runs low, the thread may become tangled around the bobbin and cause the needle to break.

8 **Slide the bobbin holder, until it clicks into place.**

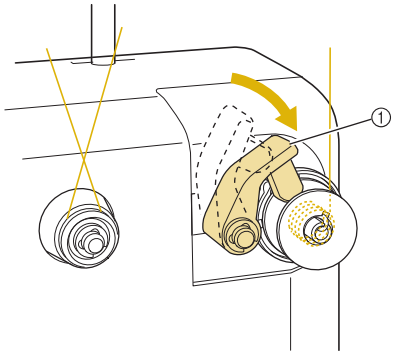

① Bobbin holder

9 **Press the main power switch to start winding the bobbin.**

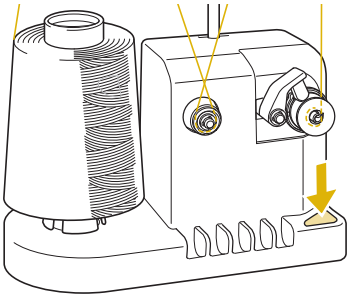

▶ Start winding the bobbin.

10 **The bobbin will stop rotating automatically when it is done winding, and the bobbin holder will return to its original position.**

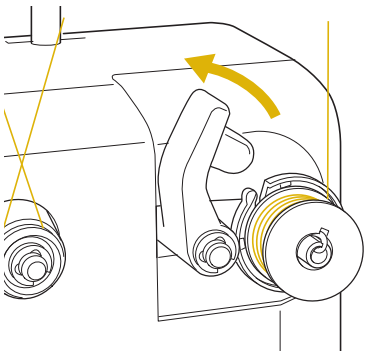

11 **Remove the bobbin.**

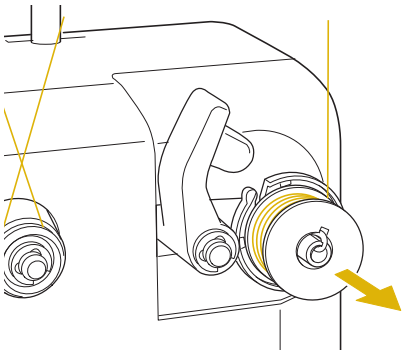

Note

- When removing the bobbin, do not pull on the bobbin winder seat. Doing so could loosen or remove the bobbin winder seat, resulting in damage to the bobbin winder.

12 **Pull the thread through the guide slit in the bobbin winder seat to cut the thread with the cutter.**

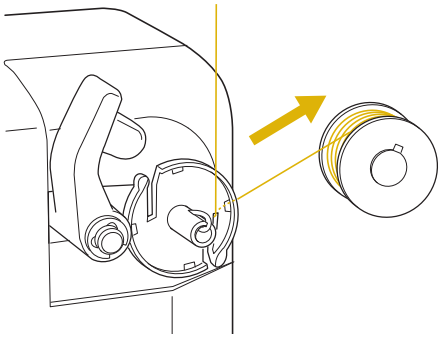

CAUTION

- **Check that the bobbin thread has been wound correctly, otherwise the needle may break or the thread tension will be incorrect.**

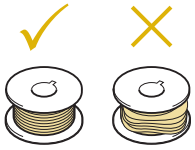

- **Be sure to clean the bobbin case each time that the bobbin is changed. Thread wax and dust easily collect around the hole in the tension-adjusting spring on the bobbin case, resulting in an incorrect thread tension. For details, refer to "Cleaning the bobbin case" on page 279.**
- **Be sure to check the tension of the bobbin thread each time that the bobbin is changed.**
- **Depending on the bobbin thread type, the tension of the bobbin thread may differ. Be sure to check the tension of the bobbin thread and adjust the tension if necessary.**
  For a metal bobbin, use both weights, large (L) and small (S).
  For detailed instructions on how to adjust the bobbin tension, refer to page 122.

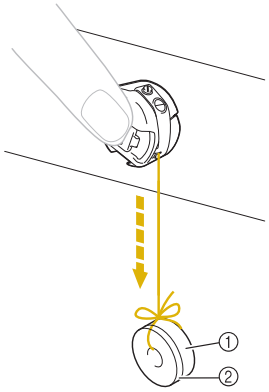

① Weight (L) (Part Code: XC5974-151)
② Weight (S) (Part Code: XC6631-051)

■ **If bobbin winding is stopped before it is finished:**
The bobbin winder stops automatically if the thread does not feed, for example, if it becomes tangled on the spool pin. If this occurs, correctly thread the bobbin winder, and then wind the bobbin correctly.

Maintenance

Simple embroidery machine maintenance operations are described below. Always keep the machine clean, otherwise malfunctions may occur.

Cleaning the LCD

If the surface of the LCD is dirty, lightly wipe it with a soft dry cloth. Do not use organic cleansers or detergents.

Cleaning the machine surface

If the surface of the machine is slightly dirty, wipe it with a soft dry cloth. If the machine is heavily dirty, lightly soak a cloth in neutral detergent, squeeze it out firmly, and then wipe the surface of the machine. After cleaning it once with a wet cloth, wipe it again with a dry cloth.

CAUTION

- **Unplug the power supply cord before cleaning the machine, otherwise injuries or an electric shock may occur.**

Note

- Do not use chemical products, such as benzene or thinner.

Cleaning the hook

Periodically remove lint and dust for better performance from Hook race area.
Use the included cleaning brush.

1. **Turn off the embroidery machine.**

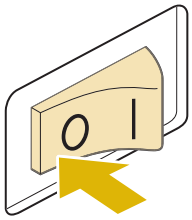

CAUTION

- **Unplug the power supply cord before cleaning the machine, otherwise injuries or an electric shock may occur.**

2. **Open the hook cover, and remove the bobbin case. (Refer to page 38.)**

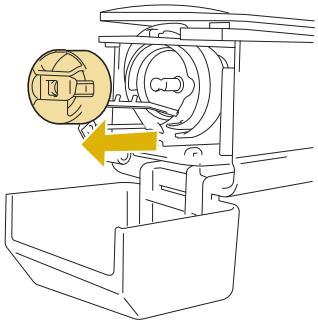

3 **Use the included cleaning brush to remove any lint and dust from the hook and its surrounding area.**

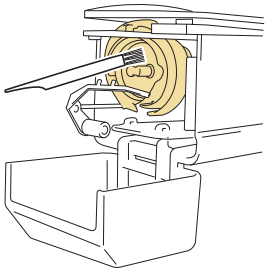

CAUTION

- **If the hook is scratched or damaged, consult your Baby Lock retailer.**

4 **After cleaning is finished, insert the bobbin case into the hook, and then close the hook cover. (Refer to page 38, 39.)**

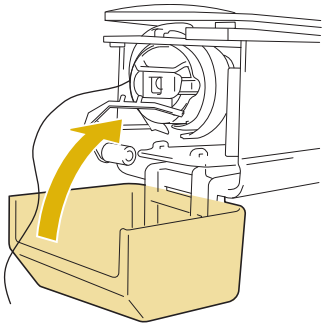

Cleaning around the needle plate

If lint and dust collect around the moving knife, the fixed knife or the thread retaining plate, the thread may not be cut correctly and the error message may appear, or various parts of the machine may be damaged. Make sure to clean around the needle plate once a month.
Use on offset screwdriver and the included cleaning brush.

1 **Turn off the embroidery machine.**

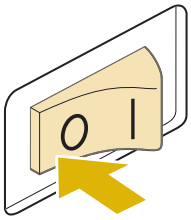

CAUTION

- **Unplug the power supply cord before cleaning the machine, otherwise injuries or an electric shock may occur.**

2 **Remove the needle plate.**
With an offset screwdriver, loosen the screws, and then remove the needle plate.

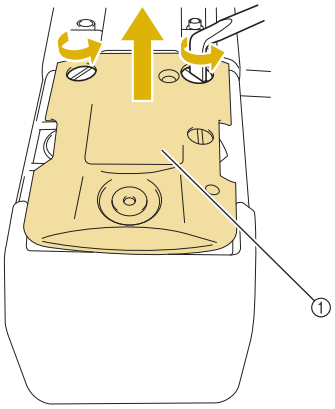

① Needle plate

3 **Use the included cleaning brush to remove any lint and dust from the moving knife, the fixed knife, the thread retaining plate, and their surrounding areas.**

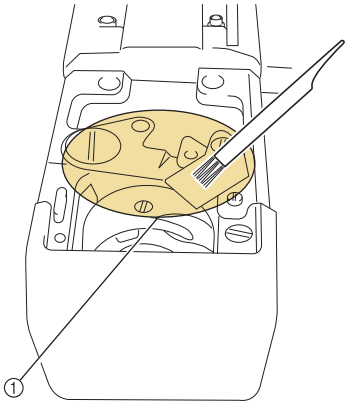

① Remove all lint in this area

4 **After cleaning is finished, attach the needle plate in the opposite way that it was removed in step ②.**

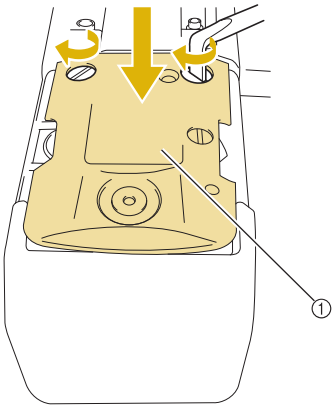

① Needle plate

Cleaning the bobbin case

Thread wax and dust easily collect around the hole in the tension-adjusting spring on the bobbin case, resulting in an incorrect thread tension. Therefore, it should be cleaned each time when the bobbin is changed.
Use a piece of paper with the thickness of a business card.

1 **Open the hook cover, remove the bobbin case, and then remove the bobbin. (Refer to page 38.)**

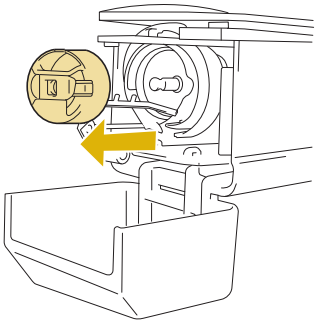

2 **Slide the paper under the tension-adjusting spring to remove any dust.**
Use a corner of the paper to remove any dust from around the hole.

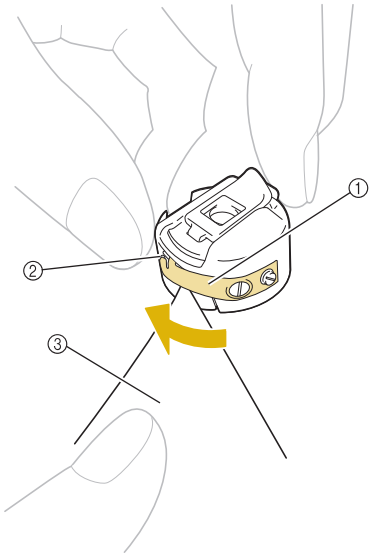

① Tension-adjusting spring
② Hole
③ Paper

Note

- Do not bend the tension-adjusting spring. In addition, do not use anything other than thick paper or paper of the specified thickness to clean the bobbin case.

3 **Use the included cleaning brush to remove any lint and dust from inside the bobbin case.**

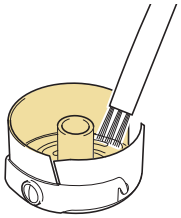

4 **After cleaning is finished, insert the bobbin into the bobbin case and the bobbin case into the hook, and then close the hook cover. (Refer to page 38, 39.)**

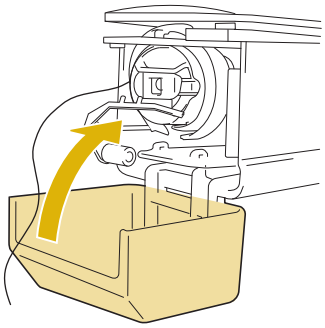

Cleaning the thread paths of the upper threads

If dust or lint has accumulated in the thread guides or tension unit in the paths of the upper threads, the thread may break while embroidery is being sewn. Periodically clean the thread paths.

■ Cleaning the thread guides

1 **Use the included cleaning brush to remove any lint and dust from below the thread guide plates.**
Clean the thread guide plates for both the upper thread guides and the middle thread guides.

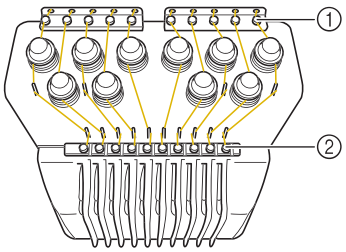

① Upper thread guide
② Middle thread guide

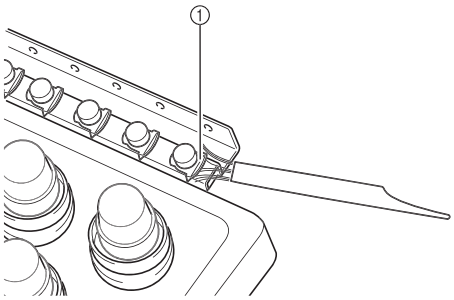

① Thread guide plate

■ Disassembling and cleaning the tension unit

1 **To remove tension dial, turn dial counterclockwise as shown on illustration.**

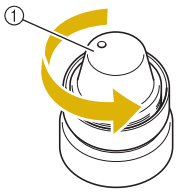

① Tension dial

2 **Using the included cleaning brush, remove any lint and dust from the two pieces of felt washers (top, bottom) inside the tension dial.**

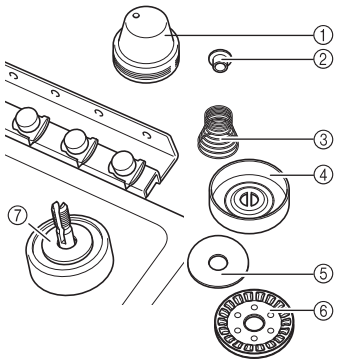

① Tension dial
② Nylon shoulder washer
③ Tension spring
④ Tension base spring
⑤ Felt washer (top)
⑥ Tension disc
⑦ Felt washer (bottom)

3 **Reassembling the tension unit.**

Note

- When reassembling the tension unit, be sure not to install the tension disc upside-down.
  There is a magnet on the bottom.

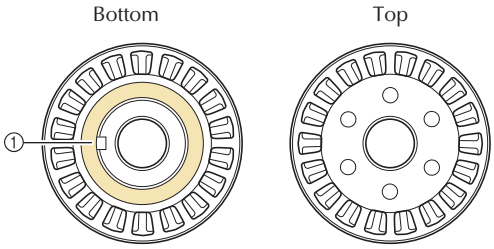

① Magnet

- When reassembling the tension unit, be careful not to lose any parts or install any parts in an incorrect order. The machine may not operate correctly if the tension units are incorrectly reassembled.

Oiling the machine

In order to extend the life of the embroidery machine's parts and keep the machine operating correctly, be sure to oil the machine before the first time that it is used. If too little oil was applied to the race, an error message may appear.
Afterward, put a drop of oil onto the hook once a day before use, and put a drop of oil to the lower needle bar felt washer every 40 to 50 hours of machine use.

■ Oiling the race

1 Turn off the embroidery machine.

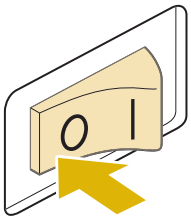

⚠ CAUTION

- **Unplug the power supply cord before cleaning the machine, otherwise injuries or an electric shock may occur.**

2 Open the hook cover, and remove the bobbin case. (Refer to page 38, 39.)

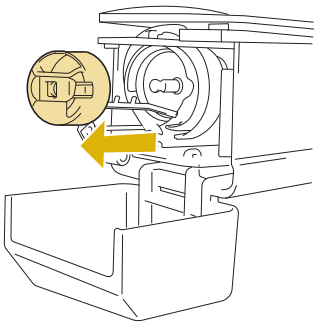

3 Rotate the handwheel (about 50 degrees) to move the race of the hook to a position where it can easily be oiled.

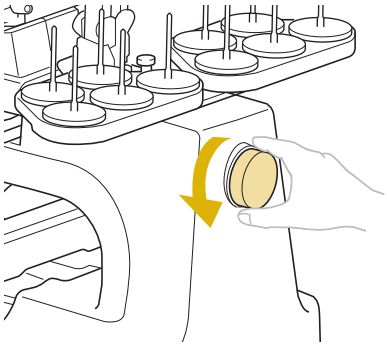

① Handwheel
- Be sure to rotate the handwheel toward the LCD panel (counterclockwise).

4 Put a drop of oil onto the hook.

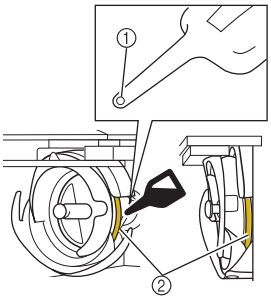

Front angle view Side view

① Punch a small hole in oil bottle.
② Apply oil here.

- Use a pointed object to punch a small hole in the tip of the included oiler before using it.

5 After oiling, insert the bobbin case into the hook, and then close the hook cover. (Refer to page 38.)

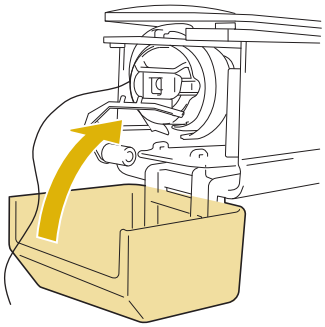

■ **Oiling the needle bars**

From embroidering screen, select one needle bar at a time. (Refer to page 63 for needle bar screen). Turn the handwheel counterclockwise bringing the needle bar to its lowest position. Put one drop of oil, as high as possible on the needle bar above the felt washer.

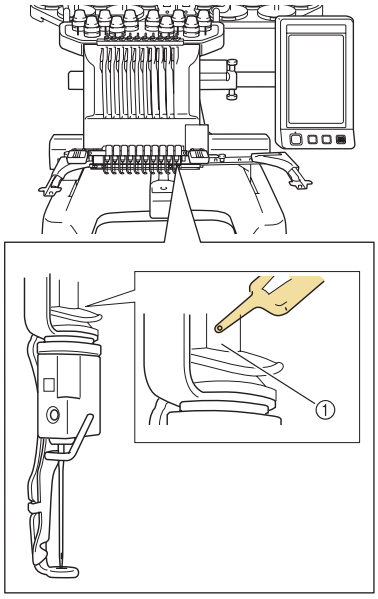

① Apply oil here.

- Too much oil may drip onto sewing project.

Note

- Put a drop of oil onto the hook once a day before use.
- Apply one drop of oil on the lower needle bar above the felt washer every 40 – 50 hours of sewing time.
- Apply only sewing machine oil. Use of any other type of oil may result in damage to the embroidery machine.
- Do not apply too much oil. Fabric or thread may get contaminated. If too much oil is applied, wipe off any excess with a rag.
- If the thread breaks while sewing or the operating noise of the hook becomes loud, apply oil onto the race hook.

About the maintenance message

Once this message appears, it is recommended to take your machine to your nearest authorized Baby Lock retailer for a regular maintenance check. Although this message will disappear and the machine will continue to function once you touch OK, the message will display several more times until the appropriate maintenance is performed.

Please take the time to arrange for the maintenance that your machine requires once this message appears. Such steps will help to ensure you receive continued, uninterrupted hours of machine operation for the future.

Troubleshooting

On-screen troubleshooting

This embroidery machine is equipped with an easy-to-use troubleshooting feature for problems during sewing. Touch the key that shows the problem, and then check for the causes that are displayed.

1. Touch .

2. Touch .

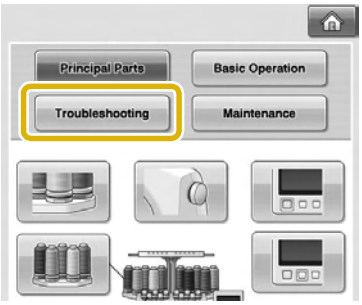

3. Touch the key that contains a description of the problem.

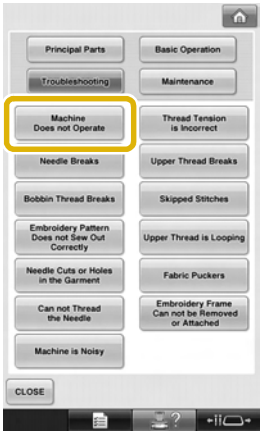

4. Check the items that are displayed.

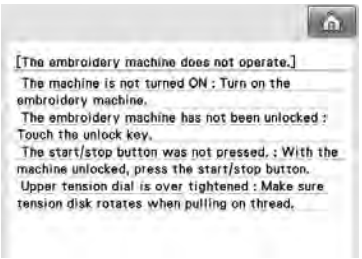

5. After checking the desired information, touch .

6. Touch .

▶ The screen that was displayed before was touched appears.

Troubleshooting

If the machine does not operate correctly, check for the following points/issues before requesting service. If the suggested remedy does not correct the problem, contact your Baby Lock retailer.

Symptom	Probable Cause	Remedy	Reference Page
The embroidery machine does not operate.	The machine is not turned on.	Turn on the embroidery machine.	p.40
	The machine has not been unlocked.	Touch the unlock key.	p.64
	The start/stop button was not pressed.	With the machine unlocked, press the start/stop button.	p.64
The embroidery frame cannot be attached to the machine.	The embroidery frame holder attached to the machine is not appropriate for the selected embroidery frame.	Select the appropriate embroidery frame holder for the embroidery frame.	p.90
The embroidery frame cannot be removed or attached.	Depending on the position where the machine? carriage has stopped, it may be difficult to remove or attach the embroidery frame.	Touch the “Needle bar/Frame move key” to position the carriage, so the embroidery frame can easily be removed or attached.	p.90
Embroidering is interrupted while embroidering a large project using the flat, quilt or jumbo frame.	Embroidering is interrupted by the presser feet not in use catching on the fabric outside of the design area.	Stitch the design as close to the center of the embroidery frame using needle bars 3 through 7, keeping the head of the machine as centered as possible.	p.108, 132
The needle breaks.	The needle is not installed correctly.	Correctly install the needle.	p.88
	The needle set screw is loose.	Use the Allen screw driver to securely tighten the needle set screw.	p.88
	The needle is bent or blunt.	Replace the needle with a new one.	p.35, 88
	The area around the hole in the needle plate is damaged. 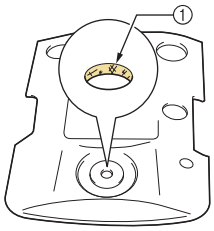 ① Scratches/Burrs	Replace the needle plate. Consult your nearest Baby Lock retailer.	
	The needle hits/touches the needle plate. 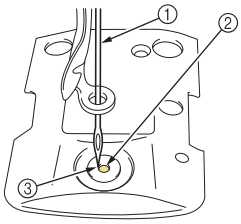 ① Needle ② Hole in needle plate ③ Needle hits hole	Replace or consult your nearest Baby Lock retailer.	p.88

Symptom	Probable Cause	Remedy	Reference Page
The needle breaks.	The presser foot is set too high and not correctly positioned. The needle hits/touches the presser foot.	Consult your nearest Baby Lock retailer.	
	The area around the embroidery foot hole is damaged. 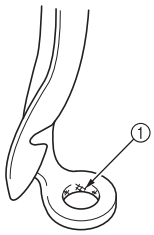 ① Scratches or Burrs	Replace the presser foot. Consult your nearest Baby Lock retailer.	
	Sliding surface on hook race is not smooth. There are scratches or burrs on it. 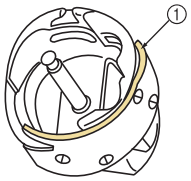 ① Hook race area	Consult your nearest Baby Lock retailer.	
	The bobbin or bobbin case are not correctly installed.	Remove and reinstall bobbin and bobbin case.	p.38, 39
	The hook is not correctly installed.	Consult your nearest Baby Lock retailer.	
	The hook stopper is not correctly installed, the hook is making a complete rotation.	Consult your nearest Baby Lock retailer.	
	The upper thread is not threaded correctly. The upper thread is catching somewhere.	Pull the upper thread by hand from below the presser foot, and check that the thread moves smoothly. If the thread does not move, it is not threaded correctly. Thread the upper thread correctly. Make sure the thread is caught by the needle bar thread guide.	p.56-59
	The upper thread tension is set too high. It does not run.	Decrease the upper thread tension and make sure tension disc rotates when pulling on thread.	p.123
	A bobbin designed specifically for this machine is not used.	Use the correct bobbin.	p.35
	The needle and the hook are not correctly passing each other.	Hook timing may be OFF. Consult your nearest Baby Lock retailer.	
	There is backlash play (forward/backward) in the needle bar case.	Consult your nearest Baby Lock retailer.	
	The thread density of the embroidery data is too fine. Three or more overlapping stitches are being sewn.	Using a data design system, correct the thread density and overstitching settings in the embroidery data.	p.150

Symptom	Probable Cause	Remedy	Reference Page
The upper thread breaks.	The needle is not correctly installed.	Correctly install the needle.	p.88
	The needle set screw is loose.	Use the Allen screw driver to tighten the needle set screw.	p.88
	The needle is bent or blunt.	Replace the needle with a new one.	p.35, 88
	The area around the hole in the needle plate is damaged. 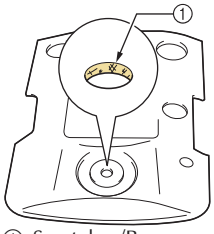 ① Scratches/Burrs	Replace the needle plate or consult your nearest Baby Lock retailer.	
	The needle is touching the needle plate. 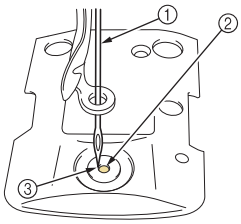 ① Needle ② Needle plate hole ③ Needle touching hole	Consult your nearest Baby Lock retailer.	
	The presser foot is set too high and not correctly positioned. The needle hits/touches the presser foot.	Consult your nearest Baby Lock retailer.	
	The area around the embroidery foot hole is damaged. 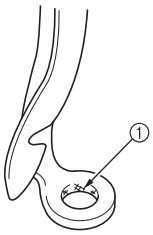 ① Scratches/Burrs	Replace the presser foot. Consult your nearest Baby Lock retailer.	
	Using a specialty thread like a metallic thread.	Slow down the machine sewing speed.	p.139

Symptom	Probable Cause	Remedy	Reference Page
The upper thread breaks.	Sliding surface on hook is not smooth. There are burns on it. 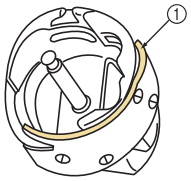 ① Hook race area	Consult your nearest Baby Lock retailer.	
	The thread is loose in the hook area.	Remove the loose thread. If the thread is tangled in the hook, clean the hook.	p.277
	The play between the hook and the race is too much.	Consult your nearest Baby Lock retailer.	
	The hook does not rotate smoothly.	Remove lint, clean and apply oil.	p.277, 282
	The space between the hook stopper and the hook cannot be adjusted.	Consult your nearest Baby Lock retailer.	
	The upper thread is not threaded correctly. 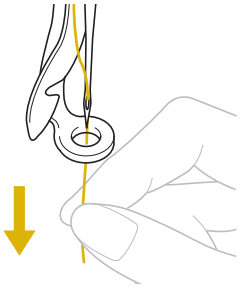	Pull the upper thread by hand from below the presser foot, and check that the thread moves smoothly. If the thread does not move smoothly, it is not correctly threaded. Un-thread the machine and re-thread the machine. Make sure the thread is correctly positioned in the needle bar thread guide.	p.56-59
	Upper thread is not positioned in upper or middle thread guide.	Make sure thread passes completely under upper and middle thread guide.	p.56-59
	There are knots or tangles in the thread.	Remove any knots or tangles.	
	The upper thread tension is too high.	Decrease the upper thread tension.	p.123
	The lower thread tension is incorrect. The thread does not roll out of the bobbin case smoothly.	Adjust the lower thread tension.	p.122
	The bobbin case is damaged.	Replace the bobbin case with a new one.	p.35
	The bobbin thread is not wound correctly.	Check that the bobbin is wound so that it is about 80% full and that the thread is evenly wound. If the bobbin is not correctly wound, replace the bobbin with one that is correctly wound or rewind the bobbin.	p.35
	A bobbin designed specifically for this machine is not used.	Use the correct bobbin.	p.35
	The automatic needle-threading mechanism is broken.	Consult your nearest Baby Lock retailer.	

Symptom	Probable Cause	Remedy	Reference Page
The upper thread breaks.	Adhesive is attached to the needle.	Replace the needle.	p.88
	The fabric is not taut.	Firmly set the fabric in the embroidery frame so that it is taut.	p.49, 94
	The thread quality is poor.	The thread quality is too weak due to age of thread. Replace thread.	
	The embroidery data contains stitches with a stitch length of zero.	Delete all stitches with a zero stitch length.	p.224
	The embroidery data contains many stitches with an extremely small stitch length.	Delete all stitches with a small stitch length.	p.224
	The thread density of the embroidery data is too fine. Three or more overlapping stitches are being sewn.	Using a data design system, correct the thread density and overstitching settings in the embroidery data.	p.150
The bobbin thread breaks.	The bobbin thread is not correctly threaded.	Correctly thread the bobbin thread.	p.38
	The bobbin is scratched or does not rotate smoothly.	Replace the bobbin.	p.38
	The bobbin case is damaged.	Replace the bobbin case.	p.38
	The thread is tangled.	Remove the thread jammed and clean the hook.	p.277
	A bobbin designed specifically for this machine is not used.	Use the correct bobbin.	p.35
Stitches are skipped.	The upper thread is not threaded correctly.	Thread the upper thread correctly.	p.56
	The needle is bent or blunt.	Replace the needle with a new one.	p.35, 88
	The needle is not installed correctly.	Correctly install the needle.	p.88
	Dust has accumulated under the needle plate or in the hook.	Clean the hook and the needle plate.	p.277, 278
	The needle and the hook are not correctly passing each other.	Consult your nearest Baby Lock retailer.	
	The thread twist is either too tight or too loose.	Improper twisting results in irregular loop formation. Try using a new spool.	
The embroidery pattern is misaligned.	The thread is tangled.	Use tweezers to remove any tangled thread from the hook.	
	The fabric is not secured in the embroidery frame (for example, the fabric is not taut).	If the fabric is not taut, the pattern may become misaligned or the stitching may shrink. Be sure to correctly frame the fabric in the embroidery frame.	p.49, 94
	The embroidery frame is too large for the size of the embroidery.	Use an embroidery frame that is close to the size of the embroidery.	p.90
	Stabilizer (backing) is not used.	Use stabilizer (backing) when embroidering on thin or stretch fabrics, fabrics with a coarse weave or fabrics that easily allow the stitching to shrink. <When using the optional cap frame> Use hard stabilizer when embroidering on a cap made of soft material.	p.93

Symptom	Probable Cause	Remedy	Reference Page
The embroidery pattern is misaligned.	The embroidery frame is not correctly attached to the carriage.	Correctly attach the embroidery frame to the carriage. Make sure that the pins on the left and right arms of the embroidery frame holder securely fit into the holes in the handles on the embroidery frame.	p.51
	The carriage or the embroidery frame is hitting objects.	The pattern may become misaligned if the carriage or embroidery frame is hitting objects. Make sure that there are no objects within the operating field of the embroidery frame.	
	The fabric is caught or pinched.	Stop the machine, and then correctly position the fabric.	
	The carriage moved while removing embroidery frame.	The pattern may become misaligned if the presser foot was hit or the carriage was moved while replacing bobbin thread, changing needle, or working near embroidery frame. Be careful when removing and reattaching the embroidery frame while replacing bobbin thread, changing needle, or working near embroidery frame. If the carriage is moved, turn the machine off, then on again. The correct frame position at the time that the machine was stopped is stored in the machine's memory, and the embroidery frame is returned to the correct position.	
	The design was not digitized correctly.	The design may need more pull compensation or underlay to accommodate stretchy or high-napped fabrics.	
There are loops in the upper thread.	The upper thread tension is low. 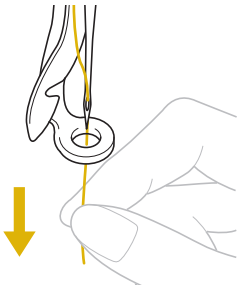	After passing the upper thread through the hole in the presser foot, pull the thread by hand to check the thread tension. If it is difficult to determine, compare it with other needle bars where looping does not occur.	p.123
	The thread tension does not correspond to the amount that the thread tension knob was tightened.	If the thread tension cannot be adjusted, thread wax and dust may have collected in the upper or middle thread guide plates, causing the thread tension guide plates to rise. Clean the thread tension guide plates.	p.280

Symptom	Probable Cause	Remedy	Reference Page
There are loops in the upper thread.	Thread is not correctly threaded around upper thread tension discs.	Clean upper thread tension disc. Rethread and make sure tension disc rotates when pulling on thread.	p.281
	The thread quality is poor.	Try sewing with different thread. If the problem no longer occurs after the thread is changed, the thread quality is the problem. Replace the thread with one of good quality.	
The machine is noisy.	Lint may be wound in the hook.	Clean the hook.	p.277
	The upper thread is not threaded correctly.	Check the thread path, and then thread the upper thread again.	p.56
	The hook is damaged.	Replace the hook. Consult your nearest Baby Lock retailer.	
	Not enough oil was applied.	Oil recommended parts.	p.282
The needle threader cannot be used.	The needle is not at the correct position.	Touch the key to move the desired needle bar to be threaded into embroidering position.	p.63
	Recommended needles are not used on this machine.	Replace and use recommended needle.	p.35, 88
	The needle is not installed correctly.	Correctly install the needle.	p.35, 88
	The hook on the automatic needle-threading mechanism is bent.	Consult your nearest Baby Lock retailer.	p.35, 88
The thread tension is incorrect.	The upper thread is not threaded correctly.	Check the thread path, and then thread the upper thread again.	p.56
	The bobbin thread is not correctly threaded.	Correctly thread the bobbin thread.	p.38
	The lower thread tension is incorrect.	Adjust the tension of the bobbin thread.	p.122
The upper thread comes out of the needle when embroidering begins.	If a short length of thread remains after the thread is trimmed, the needle may become unthreaded when embroidering begins again.	Set the remaining length of thread to “Long Tail” on the second page of the settings screen.	p.225
The upper thread does not reach the bobbin thread when embroidering begins.	There is no more thread in the bobbin, the thread does not feed from the bobbin, or the thread that is fed from the bobbin is too short.	Correctly thread the lower thread.	p.38
Although the thread is not broken, a broken thread error occurs and the machine stops.	If the thread breakage sensor in the thread tension disc of the thread tension knobs cannot detect that the thread is being fed, even if the machine is running, a broken thread error occurs and the machine is stopped. If the thread came out of the thread tension disc, even though the thread is not broken, the machine detects that the thread is not being fed and stops.	Clean the tension unit. Correctly pass the thread through the thread tension disc. If the broken thread error occurs after the machine is cleaned and rethreaded, the sensor may be damaged. Consult your nearest Baby Lock retailer.	p.58, 281

Symptom	Probable Cause	Remedy	Reference Page
There are needle cuts or holes in the garment.	The needle is dull.	Replace the needle. Dull needles have a difficult time passing through the garment, causing fabrics to tear.	p.35, 88
	The fabric is too delicate.	The simple penetration of the needle could damage delicate fabrics. Use stabilizer on top of fabric.	p.248
There is puckering in the fabric.	The thread tension is too tight.	Adjust the tension according to the type of fabric and thread being used. Polyester thread will stretch during sewing especially if the tensions are set too high. After the stitching is complete, the thread returns to its original strength, causing puckers in the fabric.	p.123
	The framing tension of the fabric is incorrect.	Tightly frame non-stretchable, woven fabrics. Loose framing will cause the fabric to bunch up under the stitching. Tautly frame soft knits using a stable backing. Overstretching the garment will cause it to look puckered when the frame is removed.	p.247
	The column stitches are too long.	Re-digitize the design with fill stitching or with multiple rows of column stitching.	
	The needle is dull.	Dull needles push fabric down and damage material. Replace the needle.	p.35, 88
	The design density is too heavy.	Too many stitches in an area pull fabric, causing it to pucker. Slightly decrease the design density by 5% to 10%.	
There is no color indicated on LED light after the lights flashing, when the thread color needs to be changed.	Black is assigned as the next thread color.	When black is assigned as the next thread color, LED light does not indicate the next thread color. The light turns off after flashing.	p.113
When embroidering thick fabric, the fabric cannot be correctly hooped.	Fabric slips within the frame because of its thickness.	Wrap masking tape or bias tape around the outer frame. The tape will provide resistance so that the fabric does not easily slip.	p. 247
There is flickering in built-in camera image displayed in the LCD screen.	If the machine is being used in a very cold environment, there may be flickering in the built-in camera image displayed in the LCD screen.	This is not a malfunction. Leave the machine turned on, and then wait a while before using the built-in camera.	–

CAUTION

- **This machine is equipped with a thread detecting mechanism. If the machine is not threaded with the upper thread, the machine will not operate correctly, even if the start/stop button is pressed after unlocking the machine.**
- **If the machine suddenly stops:**
  - Turn off the machine, and unplug the power cord.
  - Restart the machine with the correct operating procedure. Refer to page 40.

Error messages

If the start/stop button is pressed while the machine is not correctly set up or if an incorrect operation is performed, the machine stops and informs you of the error with a buzzer and an error message. If an error message appears, correct the problem according to the instructions in the message.

To close the message, touch CLOSE or perform the correct operation, then touch CLOSE. If the message appears again, consult your nearest Baby Lock retailer.

Some malfunction occurred.

There are too many characters in the curved text arrangement for the selected embroidery frame.
Change the text arrangement or the embroidery frame.

Machine cannot receive any data from the PC in the Link mode.
Turn off the machine, and check the USB connection. After connect the USB cord securely, turn on the machine again. (Refer to page 174)

When embroidering the pattern for the optional jumbo frame, the machine failed to find the positioning mark.
Follow the procedure from step 8 on page 251, again.

Machine failed to recognize the embroidery positioning mark.
Confirm that the embroidery positioning mark is in the selected area. If problem persists, reposition the mark.

When in camera mode by touching , some keys are unavailable.

Touch to cancel the camera mode to activate the key.

The installed embroidery frame is too small.
Check which embroidery frames can be used, and then install a larger embroidery frame. (Refer to page 49.)

The upper thread broke, the thread came out of the thread tension disc or a thread guide, or the machine is not threaded correctly.
Check that the thread passes under the upper and middle thread guides, and correctly thread the upper thread. (Refer to page 56.) If the thread is not broken, clean the thread guides and the tension unit. (Refer to page 280.)

The bobbin thread broke or ran out.
Check that there is thread on the bobbin and that approximately 50 mm (2 inches) of thread has been pulled out, and then re-install the bobbin. (Refer to page 38.)

The patterns you are editing take up too much memory, or you are editing too many patterns for the memory.

Sewing cannot begin from the specified starting position.
Change the starting position or rehoop the fabric and change the embroidering position. (Refer to 94, 135.)

The needle has stopped at an incorrect position.
Turn the handwheel so that the mark on the handwheel is at the top.

The needle bar case could not be moved to its initial position.
Touch CLOSE to automatically reset the needle bar case.

The needle bar case has stopped at an incorrect position.
Touch CLOSE to automatically reset the needle bar case.

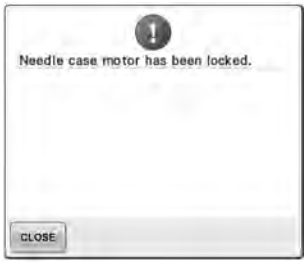

The needle bar case motor has locked up.
Touch CLOSE to automatically reset the needle bar case.

The automatic needle-threading mechanism did not operate correctly.
Remove the thread entangled in the automatic needle-threading mechanism, and then touch CLOSE.

Another operation was performed while the automatic needle-threading mechanism was threading the needle.
Press the automatic needle threading button, and then perform the other operation after the needle is threaded. (Refer to page 60.)

Too many patterns are being combined for the amount of memory available.
Delete some patterns from the combined pattern.

The pattern could not be saved because the memory is full.
Delete some patterns.

The memory capacity of the USB media has been exceeded.
There is too much data in either the machine or the USB media.

RETURN was touched in the embroidering screen.

Touch OK to return to the embroidering settings screen. The previous embroidery in the embroidering screen will be canceled.

The selected pattern is going to be deleted because [home] was touched.

The image is going to be deleted.

The machine was turned off while sewing, then turned on again.

Touch [OK] to return the machine to the condition (pattern position and number of stitches) when it was turned off. Follow the procedure described in “Resume Embroidering After Turning Off the Machine” on page 120 to align the needle position and sew the remainder of the pattern.

[RESET] was touched while thread colors were being changed.

A saved combined pattern is being rotated in the embroidering settings screen.
Color sorting for the combined border pattern will be canceled when [OK] is touched. In addition, the thread marks will be removed even if they have been set.

The thread picker did not operate correctly.
Remove the thread entangled on the thread picker.

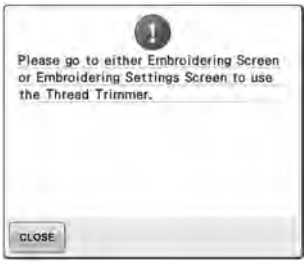

The thread trimming button was pressed while a screen other than the embroidering screen or embroidering settings screen was displayed.
Display either the embroidering screen or embroidering settings screen before using the thread trimming function.

Thread guide assembly support is not prepared.
Prepare the thread guide assembly. (Refer to "Preparing the thread guide assembly" on page 30.)

Machine failed to communicate with the PC in the Link mode.
Turn off the machine, and on again.

The thread trimming button was pressed before the machine was unlocked.
Touch LOCK to use the thread trimming function.

The machine needs maintenance. (Refer to page 283.)

Machine has recognized the embroidery position mark.
Remove the embroidery positioning sticker and touch CLOSE to continue.

The machine is retrieving a previously saved pattern.

The machine was stopped while the needle bar case was moving.
Touch CLOSE to automatically reset the needle bar case.

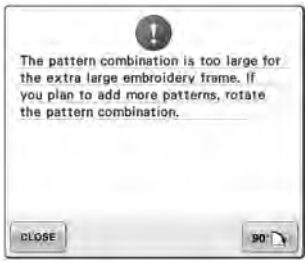

The combined character pattern is too large for the embroidery frame.
Rotate the pattern 90 degrees and then continue combining characters.

The built-in camera is being used to align the embroidery position, but the embroidery positioning sticker is too near an edge or the pattern extends from the embroidery frame.
Change the position of the embroidery positioning sticker, and then try aligning the position again.

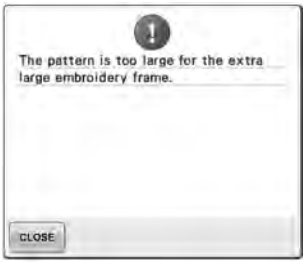

The combined character pattern is too large to fit in the extra-large embroidery frame.
Change the character pattern combination.

The motor has locked up due to tangled thread or for other reasons related to thread delivery.
If the thread is entangled in the bobbin case, clean the race, and then oil it. (Refer to page 279 and 283.)

The USB media is write-protected.
Cancel the write protection.

The USB media is write-protected.
Touch CLOSE, and cancel the write protection.

You tried to select a pattern after the USB media in which the pattern is saved has been changed.

You tried to save a copyright-protected pattern to USB media or a computer.
According to copyright laws, patterns that are illegal to reproduce or edit cannot be saved to USB media or a computer. Save the pattern in the machine's memory.

You tried to use an editing function while the pattern is not completely within the red outline.
Move the pattern so it is completely within the outline.

An unusable embroidery card is inserted.
Remove the embroidery card.

The file format is incompatible with this machine.
Check the list of compatible file formats. (Refer to page 225.)

The file size exceeds the data capacity of the machine.
Confirm the file size and format. (Refer to page 225.)

A large-size (split) embroidery pattern was selected to be combined with another embroidery pattern.
This pattern can not be combined.

The pattern has too many stitches and cannot be used.
Data with stitches that exceed specifications (500,000 stitches) cannot be displayed. Use data design software to reduce the number of stitches.

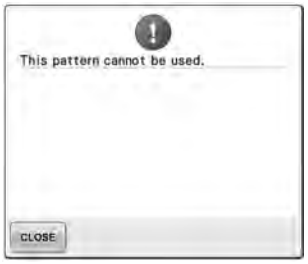

You tried to retrieve a pattern that was downloaded for a different machine.

You tried to use incompatible media.

The USB media is transmitting.

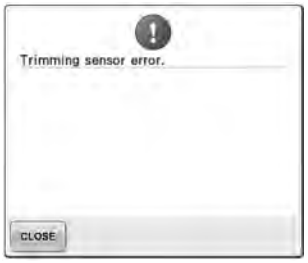

Dust may have accumulated within the moving cutter.
Clean the moving cutter. (Refer to page 278.)

An error has occurred with the USB media.

You tried to recall or save a pattern while no USB media is loaded.
Load USB media.

If any of the following messages appear, consult your nearest Baby Lock retailer.

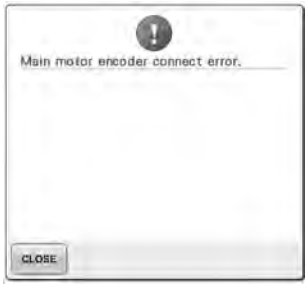

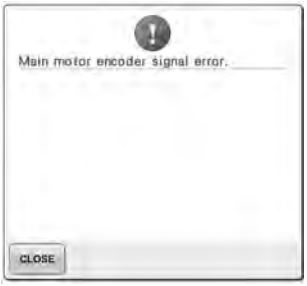

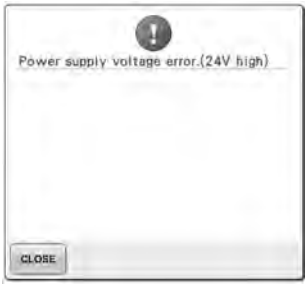

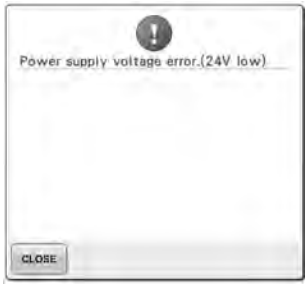

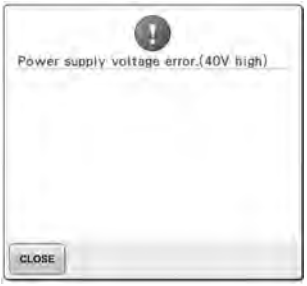

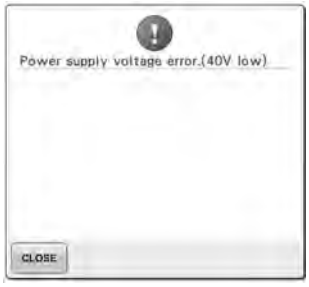
Power supply voltage error.(40V low)
CLOSE

Sewing stop.
CLOSE

Wiper error
CLOSE

X-axis home position error.
CLOSE

XY moving error.
CLOSE

Y-axis home position error.
CLOSE

If the machine does not respond when a key is pressed

If nothing happens when a key on the screen is touched (no key can be selected or the keys are misaligned), adjust the touch panel as described below.

1 Touch anywhere inside the touch panel, and turn the machine off, then on again.

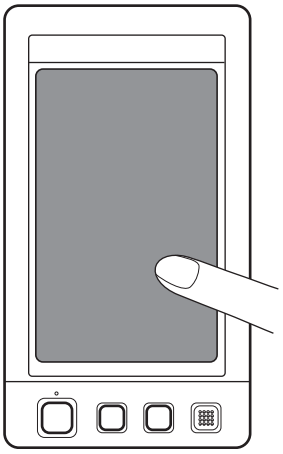

- Continue touching the touch panel until the screen shown below appears.
- The start/stop button is red.

▶ The adjustments screen appears.

2 Use the included touch pen to touch the center of the numbered crosses on the screen, from 1 to 5.

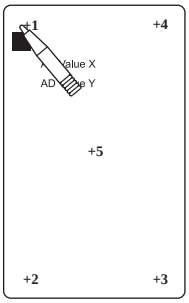

▶ AD Value X and AD Value Y numbers change with the touch of each numbered cross to show variables.

- If the buzzer sounds when cross number 5 is touched, an error occurred during setting, and "ERROR" appears on the screen. Touch the crosses again, starting from 1 to 5.

CAUTION

- **Be sure to use the included touch pen to adjust the touch panel. Do not use a mechanical pencil, screwdriver or any other hard or sharp object. Do not apply pressure to the LCD screen display, otherwise damage to the display may result.**

3 After making the necessary touch panel adjustment, "SUCCESS" will show on the screen.

Note

- If the keys still do not respond, even after the touch panel is adjusted, or if the touch panel cannot be adjusted, contact your nearest Baby Lock retailer.

4 Turn the machine off, and on again.

Specifications

Embroidery machine specifications

Item	Specification
Weight	42 kg (92 lb)
Machine size	560 (W) × 589 (D) × 785 (H) mm (22 (W) × 23-1/4 (D) × 31(H) inches)
Sewing speed	Maximum / Tubular: 1,000 spm, Cap: 600 spm Speed range / Max.: 1,000 spm, Min.: 400 spm
Hook Type	Vertical rotary hook
Hook size	Normal size (Type L)
Needle	HA130EBBR / #11
Number of needle	10 needles
Thread tension	Manual
Cap sewing	(Option) 60 mm (H) × 360 mm (W) (2-3/8 inches (H) × 14 inches (W))
Tubular sewing	(4 frames available) 200 mm (H) × 360 mm (W) (7-7/8 inches (H) × 14 inches (W)), 130 mm (H) × 180 mm (W) (5-1/8 inches (H) × 7-1/8 inches (W)), 100 mm (H) × 100 mm (W) (4 inches (H) × 4 inches (W)), 40 mm (H) × 60 mm (W) (1-1/2 inches (H) × 2-3/8 inches (W))
Thread trimming	Upper and lower thread
Thread breakage sensor	Yes / Upper thread and bobbin thread
Automatic needle threader	Yes
Communication with PC	USB port
Data storage	USB media

Upgrading Your Machine's Software

You can use USB media or a computer to download software upgrades for your embroidering machine. When an upgrade program is available on "www.babylock.com", please download the files following the instructions on the website and steps below.
You can use USB to download software upgrades/updates (**********.upf) for your sewing machine.

Note

- When using USB media to upgrade the software, check that no data other than the upgrade file is saved on the USB media being used for this upgrade.

Upgrade procedure using USB media

1 While pressing the automatic threading button, turn the main power to on.

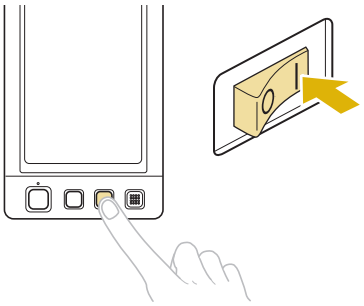

▶ The following screen will appear on the LCD.

2 Touch [ ].

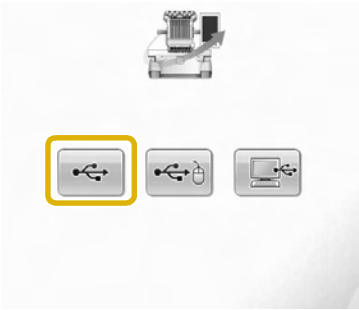

3 Insert the USB media into the primary (top) USB port on the machine. The media device should only contain the upgrade file.

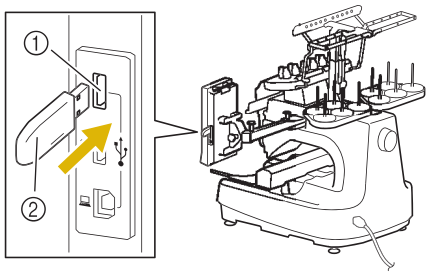

① Primary (top) USB port for media
② USB media

Note

- The access lamp will begin blinking after inserting USB media, and it will take about 5 to 6 seconds to recognize the media. (Time will differ depending on the USB media).

4 Touch [LOAD].

▶ The upgrade file is downloaded.

Note

- If an error occurs, a red text error message will appear. When the download is performed successfully, following message will appear.

5 **Remove the USB media, and turn the machine off and on again.**

Upgrade procedure using computer

1 **While pressing the automatic threading button, turn the main power to on.**

▶ The following screen will appear on the LCD.

2 **Touch** .

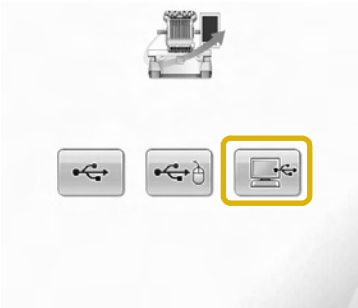

3 **Plug the USB cable connector into the corresponding USB ports for the computer and for the machine.**

▶ "Removable Disk" will appear in "Computer (My computer)".

4 **Copy the upgrade file to "Removable Disk".**

5 **Touch** LOAD.

▶ The upgrade file is downloaded.

Note

- If an error occurs, a red text error message will appear. When the download is performed successfully, following message will appear.

6 **Unplug the USB cable, and turn the machine off and on again.**

Index

Symbols

"DST" Setting 216, 223

A

Accessories 22
Adjusting
  angle 100
  cap frame driver 257
  edited patterns 181
  legs 28
  operation panel 29
  sewing speed 139
  thread tension 122
  touch panel 302
Alphabet patterns 159
Application check 216
Appliqué alphabet 234
Appliqué sewing 127, 234
Array key 75, 162, 184
Arrow key 99, 181
Automatic lock stitch 134
Automatic needle-threading button 21, 60
Automatic needle-threading mechanism 60

B

Background colors 222
Backing 245
Basic procedures 37
Basting 126
Bobbin 35
  installing 38
Bobbin case 38, 39, 122, 279
  reinstalling 39
  removing 38
Bobbin winder 272
Border frame 195
Border function 190
Built-in camera 20, 103

C

Canton fleece 248
Canvas 248
Cap frame 253
  attaching 261
  preparing to use 255
  removing 268
Cap frame driver 255
  adjusting 257
  installing 255
Cap frame mounting jig 255
Caps
  golf style 255
  low profile (low fitting) 254
  standard (pro style) 254
Carriage 20
Centerpoint 220
Change thread color key 75, 140, 188
Changing
  character spacing 185
  colors of the pattern 188
  display guides 218
  embroidering position 99
  language 229
  size 182
  text arrangement of a character 184
  thread color display 220
  thread density 187
  thread spools 113
  units of measurements 229
Checking
  needle bars and thread colors 54
  preview image 48
  thread spool changes 111
  thread tension 68
Cleaning
  around the needle plate 278
  bobbin case 279
  hook 277
  LCD 277
  machine surface 277
  maintenance message 283
  oiling machine 282
  thread paths 280
Color information 220
Color thread table 244
Combining patterns 179
Common screen 71
Computer
  port 83
  USB 166
Corduroy 248
Cotton sheeting 248

D

Delete file key 164, 173
Delete key 74, 160
Deleting
  pattern 202
  previously saved pattern 164, 173
  short stitches 224
Denim 248
Density key 75, 187
Digitizing information 270
Display 36, 71
Display guides 218
Distance from center (horizontal) 74
Distance from center (vertical) 74, 76
Dress shirt (woven) 248
DST 223
Duplicating a pattern 201

7

E

Edit end key 74
Edit key 72, 77
Editing 46, 179, 203
combined pattern 204
restart from beginning or middle 115, 118
Editing patterns as a group 202
Embroidering
corner of fabric 96
small fabric 96
tape or ribbon 96
Embroidering position 99
Embroidering screen 54, 79
Embroidering settings screen 47, 76, 203
Embroidery
basic method 64
repeatedly sewing 136
Embroidery cards 164
Embroidery data 150
Embroidery frame
attaching to the machine 51
hooping 49
removing 69
types 91
Embroidery frame holder
attaching 32
installing 269
removing 255
Embroidery frame holders 90
Embroidery frame indicators 49, 74, 76
Embroidery patterns 154
editing 46
selecting 44
Embroidery positioning sticker 105
Embroidery thread 56
Enlarge the pattern image 179
Error messages 293

F

Fabric 36, 96
precautions for caps 255
recommendations 36
removing 69
Fabric/stabilizer compatibility chart 248
Features 8
Feet 20
Floral alphabet patterns 162
Forward/Backward stitch key 80, 115, 118
Frame patterns 154
Front view 20

G

Golf shirt 248
Golf Style cap 255
Greek alphabet patterns 163

H

Handwheel 21, 282
Headwear 248
Hook 277
Hook cover/Hook 20
Hooping 49, 94, 247
Horizontal mirror image key 182

J

Jumbo frame 249
Jump code 223
Jumpstitch trimming 223

L

Language 218, 229
LCD 21, 36, 71
Lingerie 248
Link function 174
Lock stitching key 77, 134
Locking mechanism 64
Locking the needle bar 100
Low Profile (Low fitting) 254
Lower thread guide 20

M

Machine operations guide key 230
Main power switch 21, 40, 70
Maintenance 230, 277
Manual color sequence 132
Manual needle bar settings 145
Maximum sewing speed key 80
Monogram and frame designs 155
Mounting jig cap frame 259
Mouse pointer shape 229
Moving a pattern 181
Moving needle 63
Multi color key 75, 188

N

Names of machine parts 20
Needle 35
changing 88
threading 60
Needle bar case 20
Needle bar key 55, 80
Needle plate 278
Next page key 73
Number of thread color changes 73, 75, 76

O

Oiling 282
Operation panel 20, 21, 29
Optional accessories 24

P

Pattern display area 71, 76
Pattern editing screen 46, 74, 179
Pattern list screen 44, 73
Pattern selection 153
Pattern selection key 71, 180
Pattern size 74, 76
Pattern type selection screen 44, 72
Positioning key 74, 77, 99, 181
Power supply cord 40, 70
Power supply plug 21

Preview key 73, 74, 77
Previewing the Image 48
Previous page key 73
Principal parts 20, 230

R

Region display 79
Remaining length 225
Reserve stop key 80, 140, 142
Reserved needle 145, 217
Resume embroidering 120
Retrieving
  from Computer (USB) 166
  from Embroidery cards 164
  from memory 163
  from USB media 172
Return key 73, 80
Right-side/rear view 21
Rotate all key 77, 100, 203
Rotate key 75, 183
Rotation angle 74, 76

S

Satin jacket 248
Saving embroidery patterns 209
  computer 212
  machine's memory 209
  USB media 211
Screen 36, 41, 42, 71
Screen saver settings 225
Selecting
  edited pattern 180
  embroidery pattern 44, 153
Set key 73
Setting up 26
Settings key 71, 216
Sewing
  appliqué 234
  pattern aligned with a mark on the fabric 242
Sewing key 77
Sewing light 20, 227
Sewing order 79
Sewing speed 139
Sewing the embroidery 64
Sewing time 79
Short stitch delete 216, 224
Silk 248
Size (horizontal) 73, 74, 76
Size (vertical) 73, 74
Size key 73, 75, 182
Spacing key 75, 185
Speaker 21
  speaker volume 227
Specifications 303
Split (large-size) embroidery patterns 238
Spool 56
Spool change indicator 79, 111
Spool stand 20, 31
Spool stand LED 10, 113, 228
Stabilizer 93, 245, 248
Standard (Pro Style) caps 254
Standard Tail 216, 225
Start/stop button 21, 65
Starting/ending position key 77, 135, 136
Stitch count 79
Stopping embroidering 66
  at color changes 140
  pause 140
Sweater knit 248
Sweatshirt 248

T

Tajima data 151, 223, 244
Temporary needle bar setting key 80, 142
Ten-needle machine 8
Tension dial 68, 123
Terry cloth 248
Thread 35, 36, 56, 245
Thread color 244
Thread color display 220
Thread color set up display 80
Thread density 187
Thread guide 20, 57
Thread guide assembly 30
Thread mark 193
Thread recommendations 36
Thread sensor 228
Thread spools 113
  changing 113
  easily changing 114
Thread tail length 225
Thread tension 122, 276
Thread tension disc 58
Thread tension knobs 20, 123
Thread trimming button 21, 67
Threading
  needle 60
  upper thread 54, 56
Thumbnail size 222
Tips for machine operation 241
Touch panel 21
Trial sewing key 53, 77
Troubleshooting 230, 284
T-shirt 248

U

Uninterrupted embroidering (one color) 143
Units of measurements 218, 229
Unlock key 64, 80
Upgrading machine's software 304
  computer 305
  USB media 304
Upper threading 54
USB connectivity 82
  computer 83
  media 82
  mouse 84
USB media 172, 211

V

Ventilation slots 21
Version 218
Volume of speaker 227

English
884-T11
XF0036-001
Printed in Taiwan