brother

Roll Feeder

ScanNCut DX

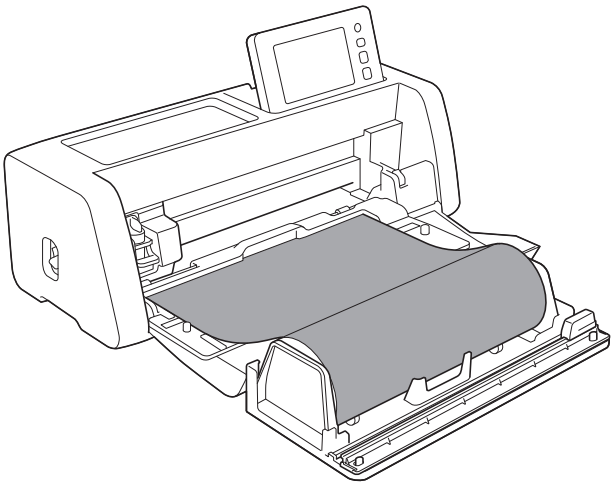

CONTENTS

Read Before Use 2
Accessories 2
Operating Precautions 2
When using Disney patterns 2
Creating Data for the Roll Feeder 3
Activating the Roll Feeder Function 3
Creating Data 4
Weeding Box Function 5
Exporting Data as FCM File 7
Sending Data to the Machine 8
Installing the Roll Feeder 9
Installing the Base Attachment to the Machine 9
Installing the Roll Holder 10
Loading Material Into the Roll Feeder 10
Checking the End of the Material 11
Evenly Trimming the End of the Material 12
Feeding the Material 14
Retrieving Roll Feeder Data On the Machine and Cutting 15
Retrieving Data on the Machine 15
Cutting 16
Trial Cutting 18
Trial Feeding 20
Changing the Cutting Start Position 21
Continuous Cutting 22
Removing the Roll Feeder To Feed Using a Mat 23
Consumables/Maintenance 25
Replacement Criteria 25
Replacing the Trimmer Blade 25
Cleaning the Trimmer Blade 27
Troubleshooting 28
When Material Has Become Jammed in the Machine 30
Error Messages 32
Cutting Machine Error Messages 32
CanvasWorkspace Error Messages 32
Useful Information 33
Roll Feeder Usage 33
Compatible Materials 33
Examples of Materials That Can Be Used 33
Non-Compatible Material 35
Sizes of Rolled Material That Can Be Loaded Into the Roll Feeder 36
Blades That Can Be Used 36
Scanner Lever Position 36

Read Before Use

Accessories

After purchasing this kit, check the contents.

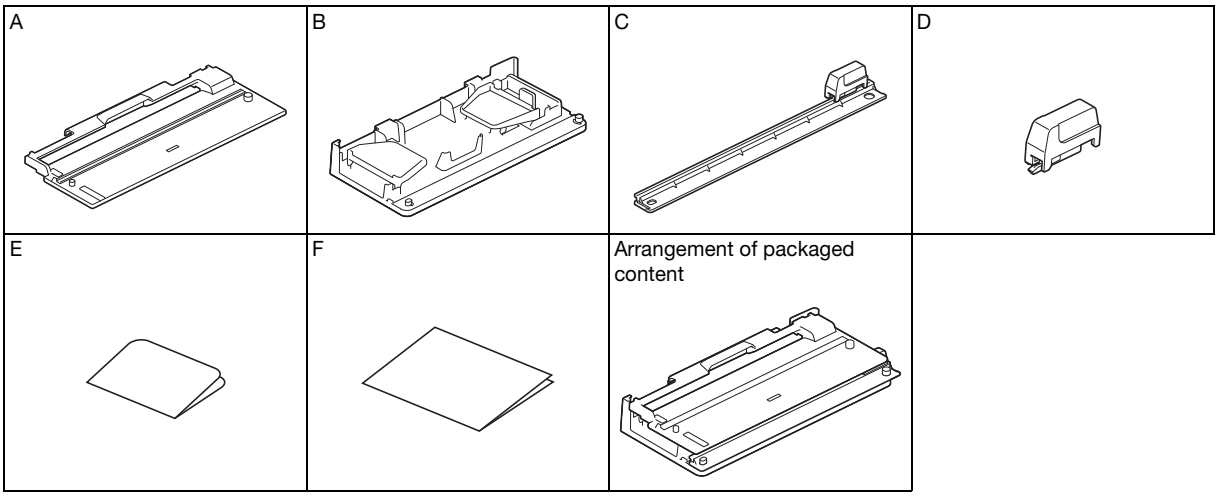

	Part name
A	Base attachment *1
B	Roll holder
C	Trimmer *1
D	Trimmer blade *2
E	Activation card for roll feeder function on CanvasWorkspace (PC Version) and 1 free sample design
F	Insertion

*1 This part is attached to the roll holder (B).
*2 This part is attached to the trimmer (C). Do not remove it except when replacing it. If it is removed, see “Installing the Trimmer Blade” on page 26.
This part is a consumable. When the cutting edge becomes blunt, purchase CADXRFC1 (trimmer blade). Purchase consumables from the authorized retailer where the roll feeder was purchased.

Operating Precautions

- This attachment was specially designed for the ScanNCut DX model. It cannot be used with any model other than the ScanNCut DX.
- In order to use the roll feeder function, the dedicated application CanvasWorkspace (PC Version) must be installed on your computer.
- When using the built-in Disney patterns, CanvasWorkspace does not need to be installed.
- Only rolled material with a width of 305 mm (12") can be used.
- The contents of this document are subject to change without notice.
- The screens in this manual are for illustration purposes only and may differ from the actual screens.

Before beginning, please read the “Useful Information” on page 33.

When using Disney patterns

With Disney patterns, follow the procedure below to easily cut out the pattern using only the cutting machine.

Step1 Install the roll feeder onto the ScanNCut DX. **P.9**
Step2 Select a built-in Disney pattern. **P.15**
Step3 Remove the roll feeder. **P.23**

Creating Data for the Roll Feeder

Create data for the roll feeder with CanvasWorkspace (PC Version).

- CanvasWorkspace (PC Version) (ver. 2.0.0 or later) must be downloaded and installed on your computer. (http://s.brother/cuoad/)
- In order to use CanvasWorkspace, a CanvasWorkspace login ID is required.
  If you do not have a free account, click [Create New Account] in the screen that appears after installation, and then follow the on-screen instructions to create an account.
- Data cannot be created and edited in CanvasWorkspace (Internet Version).

> - When using a built-in Disney pattern available on the cutting machine, the below procedure does not need to be performed. Refer to page 9 and install the roll feeder.

Activating the Roll Feeder Function

1 Start up CanvasWorkspace on a computer.

2 In CanvasWorkspace, select [Account Settings...] from the [Help] menu.

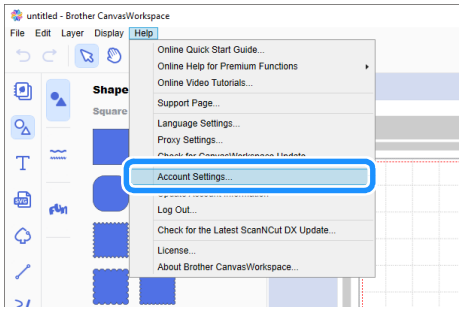

3 Click [Premium Function Activation].

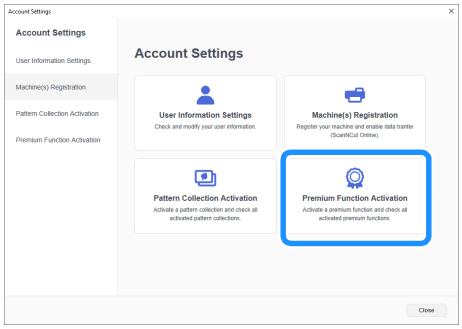

4 Type in the activation code on the included activation code card, and then click [Activate].

- A connection to the Internet is required for activation.
- The uppercase letters “O” and “I” are not used in the activation code.
- The activation code is valid for only one CanvasWorkspace login ID. The same activation code cannot be used again.

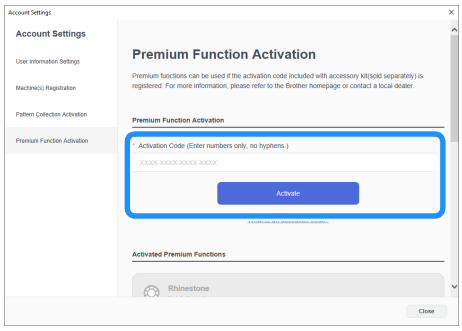

5 When the activation confirmation message appears, confirm the information, and then click [Activate] if it is correct.

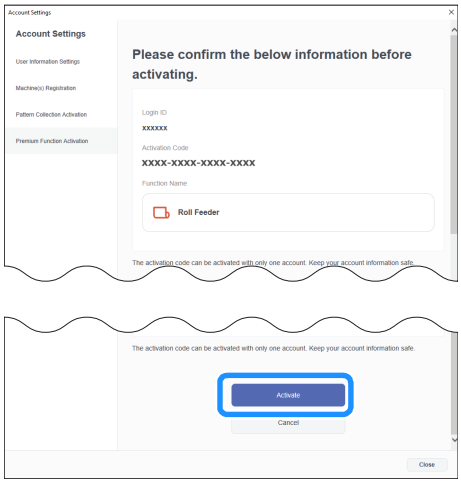

6 Click [OK] to finish the activation.

Creating Data

Create data for the roll feeder with CanvasWorkspace.

■ Preparing the Format

1 Start up CanvasWorkspace on a computer.

2 Click (Artboard) on the right side of the screen.

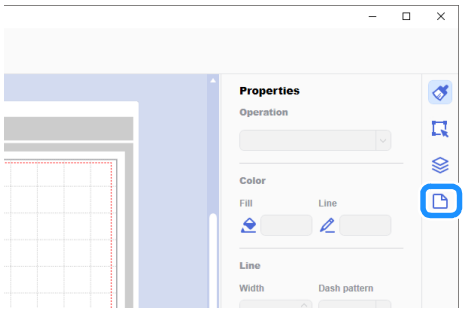

▶ The [Artboard] Panel appears in the Control Panel.

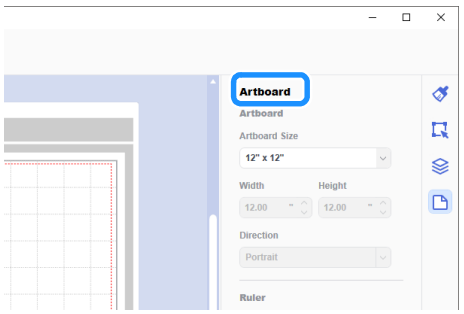

3 Select [Rolled Material] under [Artboard Size].

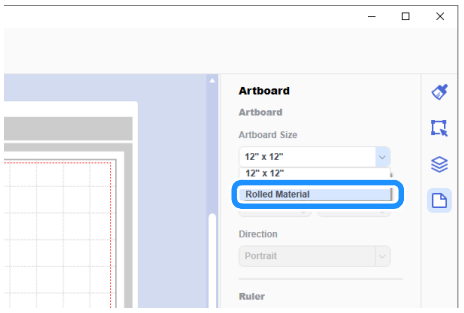

▶ No mat appears in the background.

4 If necessary, change the height and orientation of the artboard.

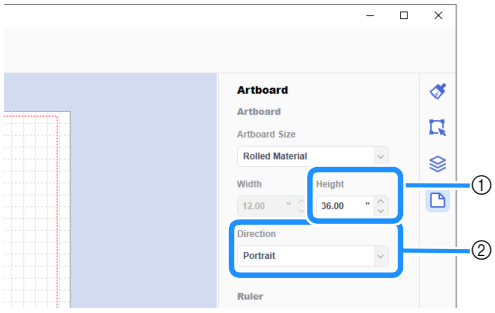

① Artboard height

② Artboard orientation (Portrait/Landscape)

▶ Preparation of the format is finished.

Memo

- The orientation of the data does not change automatically if the orientation of the artboard was changed.
- Even if data is created in the landscape orientation, it will be changed to the portrait orientation when exported as cutting data (FCM file). For details on cutting data, see “Exporting Data as FCM File” on page 7.
- The size of the artboard appears as the size of the material. The red box indicates the cutting area. Cutting cannot be done in the areas above and below and to the left and right of the box.

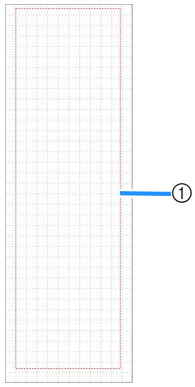

① Red box

■ Creating Cutting Data

You can either create original data in CanvasWorkspace or import data, then edit it. For this example, we will create data by editing the pre-installed sample pattern.

1 Select (Roll Feeder) in the object panel, and then drag the pattern into the drawing area.

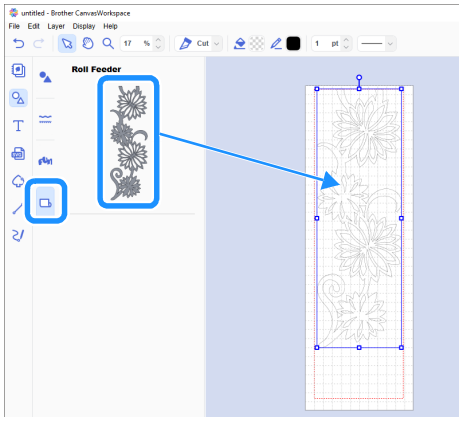

Memo

- Adjust the pattern so that it fits within the red box. For details, see “Creating Data” on page 4.
- A pattern can also be positioned in the drawing area by clicking the pattern.
- Data created with the machine, for example, scanned data or built-in patterns, can also be used with the roll feeder. After importing the data into CanvasWorkspace, select [Rolled Material] under [Artboard Size], and then export it as an FCM file.

2 Edit the sample pattern.

Memo

- For details on editing in CanvasWorkspace, select [Online Video Tutorials...] from the [Help] menu.
- By adding a margin at the beginning of the data, multiple copies can be continuously cut out with a certain amount of space between them.

▶ After creating the cutting data, export it or transfer it to the cutting machine. For details on exporting data to a computer or USB flash drive as an FCM file (which can be retrieved on a cutting machine), see “Exporting Data as FCM File” on page 7.
For details on transferring the data to the machine, see “Sending Data to the Machine” on page 8.

Weeding Box Function

Weeding is the process of removing the unnecessary parts around a cut pattern to leave the desired parts on the backing paper or backing film.
By using the Weeding Box function, a box (weeding box) can be cut around the pattern, making it easier to peel off unnecessary parts.
For this example, we will use patterns included with the application.

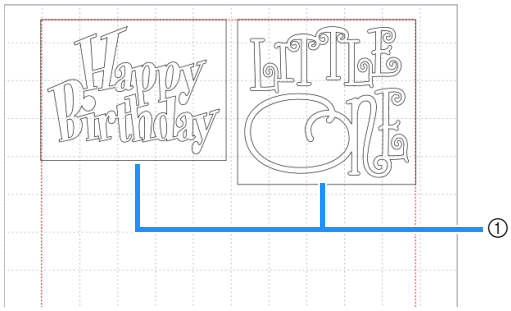

① Weeding box

The following shows the difference between weeding with and without a weeding box.

- Without a weeding box

When peeling off large unnecessary parts, they stick to each other or to the desired parts, making weeding difficult.

- With a weeding box

Cutting a weeding box breaks up unnecessary parts into smaller parts, making weeding easier.

1 Click (Edit) on the right side of the screen.

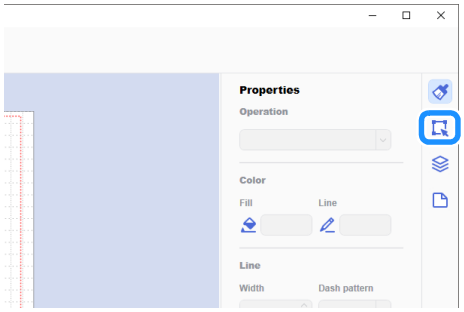

▶ The [Edit] Panel appears in the Control Panel.

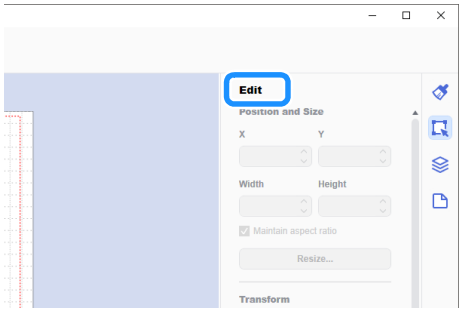

2 Select the pattern, and then click [Weeding Box...].

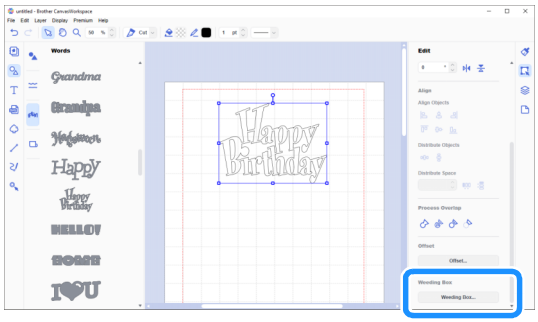

▶ The [Create Weeding Box] dialog box appears.

3 Select how to specify the size of the weeding box.

■ [Specify the Spacing from the Selected Object]

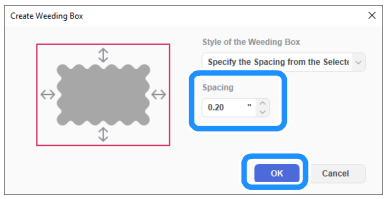

Specify the values, and then click [OK].

■ [Specify the Rectangle Size]

Specify the values, and then click [OK].

4 Repeat steps 2 and 3 for each object that will be cut with a weeding box.

▶ The weeding box is created.

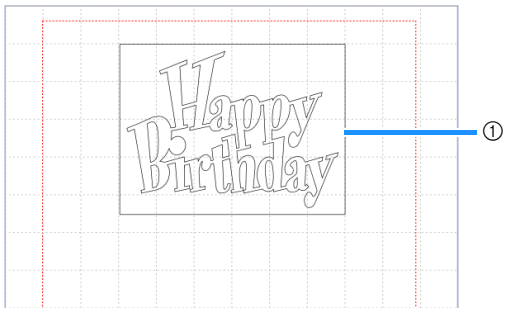

① Weeding box

Memo

- The data for a created weeding box is saved on a layer separate from that for the pattern data.

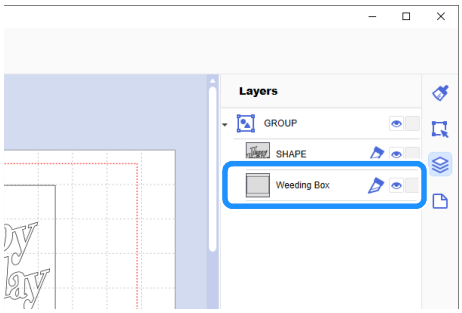

Exporting Data as FCM File

Save data as an FCM file on a computer or USB flash drive, and then use a USB flash drive to transfer the data to the cutting machine.

▶ For details on transferring data directly from CanvasWorkspace to a cutting machine, see "Sending Data to the Machine" on page 8.

■ Saving to a USB Flash Drive

1 Plug the USB flash drive into a USB port on the computer.

2 In CanvasWorkspace, select [Export FCM File…] from the [File] menu.

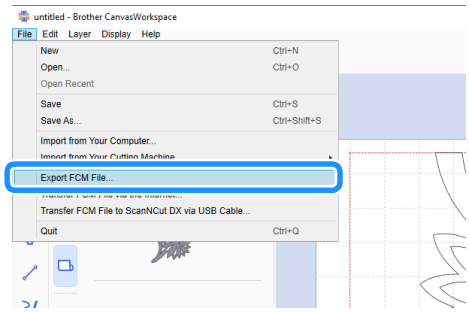

Note

- In order to export data for a roll feeder, [Rolled Material] must have been selected under [Artboard Size] when the data was edited. Before exporting the data, recheck this setting. For details, see "Creating Data" on page 4.

3 Select [USB Drive (*)] as the destination, and then click [Save].

* This designation differs depending on the operating system being used.

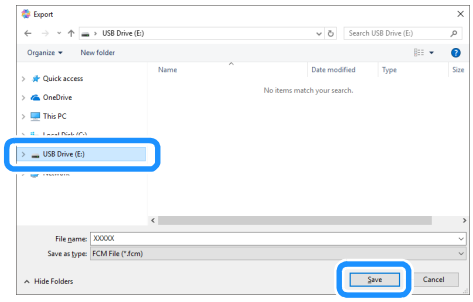

▶ The data is saved as an FCM file on the USB flash drive.

Sending Data to the Machine

Data opened in CanvasWorkspace can be transferred to a cutting machine as an FCM file (which can be retrieved on the cutting machine).

■ Transferring Using a USB Cable (compatible only with Windows)

1 Insert the USB cable connectors into the corresponding USB ports on the computer and on the cutting machine.

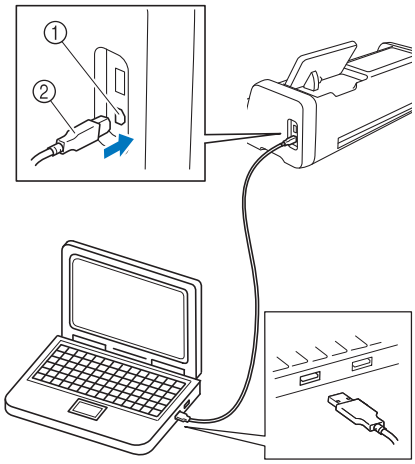

① USB port for a computer
② USB cable

Note

- The connectors on the USB cable can only be inserted into a port in one direction. If it is difficult to insert the cable connector, do not insert it with force and check the orientation of the connector.
- When transferring data for a roll feeder to the cutting machine, the home screen must be displayed on the machine.

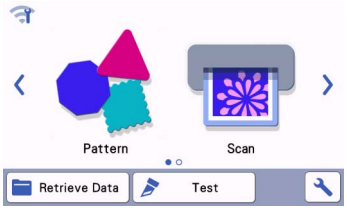

2 In CanvasWorkspace, select [Transfer FCM File to ScanNCut DX via USB Cable…] from the [File] menu.

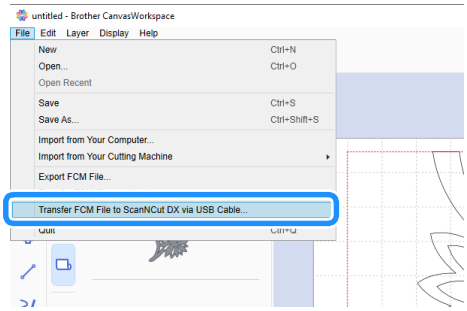

▶ When a message appears, indicating that the data has been sent to the machine, confirm the details, and then click [OK].

Note

- In order to transfer data for a roll feeder, [Rolled Material] must have been selected under [Artboard Size] when the data was edited. Before transferring the data, recheck this setting. For details, see “Creating Data” on page 4.

■ Transferring Via Wireless Network Connection

- A connection to the Internet is required.
- The machine must be connected to the wireless network. This function can be used only after a connection to CanvasWorkspace has been established. For details on establishing a connection, refer to the Wireless Network Setup Guide for the cutting machine.

1 In CanvasWorkspace, select [Transfer FCM File via the Internet…] from the [File] menu.

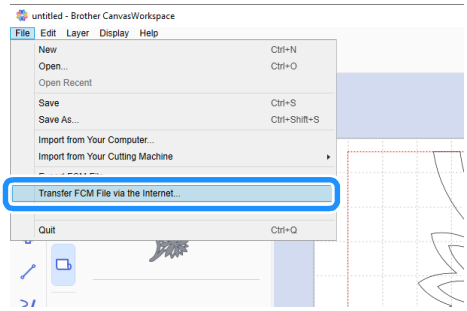

▶ When a message appears, indicating that the data has been sent to the machine, confirm the details, and then click [OK].

Note

- In order to transfer data for a roll feeder, [Rolled Material] must have been selected under [Artboard Size] when the data was edited. Before transferring the data, recheck this setting. For details, see “Creating Data” on page 4.

Installing the Roll Feeder

In order to install the roll feeder for cutting, the cutting machine must be prepared, and preparations must be made to install the roll feeder and rolled material onto the machine.

Installing the Base Attachment to the Machine

1 Touch ❯ in the home screen to display the following screen.

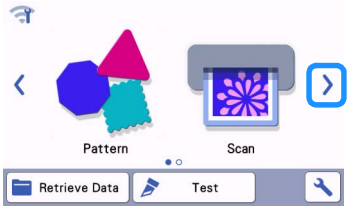

Memo

- When using the roll feeder, “Retrieve Data” and “Test” are not available. Select “Roll Feeder” to use those functions. (page 15 and page 18)
- When using the roll feeder, “Scan” is not available.

2 Select “Roll Feeder”.

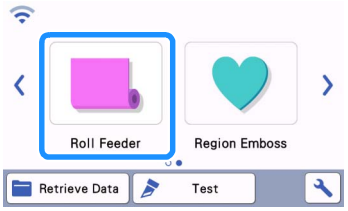

Memo

- After “Roll Feeder” is selected, the following screen appears. Select “Attach the roll feeder” to confirm the instructions for installing the roll feeder.

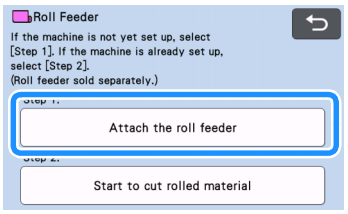

3 Pull the feeder release lever (on the right side of the machine) toward you.

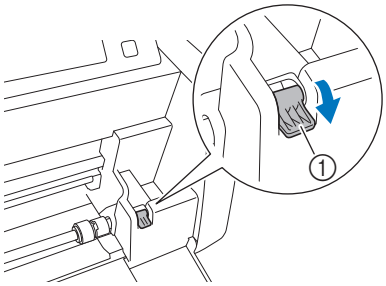

① Feeder release lever

▶ Only the right side of the shaft is raised, and the shaft is unlocked.

4 Grab the feed roller and feed roller lock dial, and then, while holding the feed roller in place, rotate the feed roller lock dial toward the back to the unlock position (🔓).

▶ The feed roller can be slid.

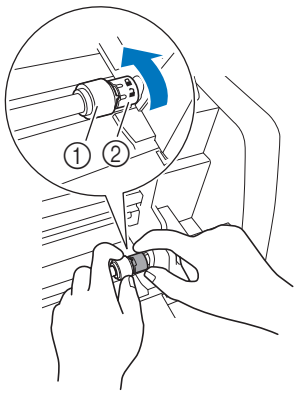

① Feed roller

② Feed roller lock dial

5 Slide the feed roller from ▦ to ▭.

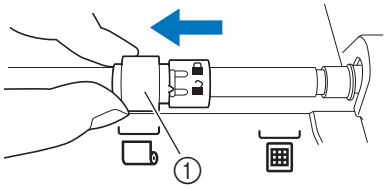

① Feed roller

6 Grab the feed roller and feed roller lock dial, and then, while holding the feed roller in place, rotate the feed roller lock dial toward you to the lock position (🔒).

▶ The feed roller is locked in place.

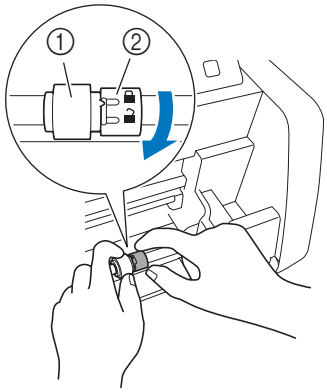

① Feed roller

② Feed roller lock dial

7 **Return the feeder release lever (on the right side of the machine) to its original position.**

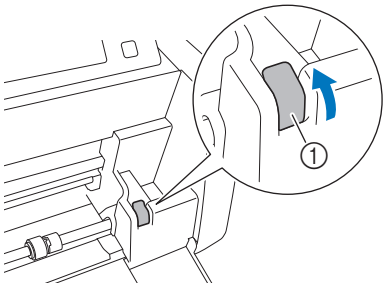

① Feeder release lever

▶ Only the right side of the shaft is lowered, and the shaft is locked.

8 **Install the base attachment so that its end hooks onto the shaft.**

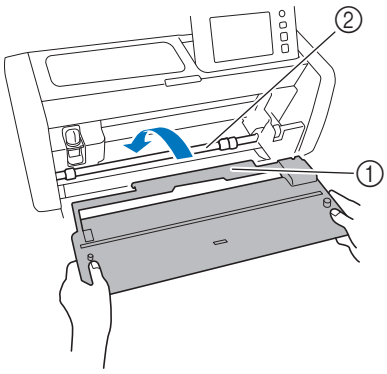

① Base attachment

② Shaft

Note

- If the feed roller is not correctly positioned, the base attachment cannot be installed correctly. Make sure that the feed roller is moved to the position for using the roll feeder.
- Press on the base attachment to firmly secure it to the shaft.
- Make sure that the base attachment is secure against the front tray cover.

Installing the Roll Holder

1 **Place the roll holder down so that its hooks fit into the holes in the front tray cover.**

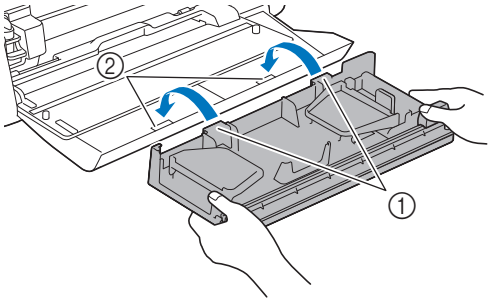

① Hooks on roll holder

② Holes in front tray cover

2 **Flip up the guide plate on each side of the roll holder.**

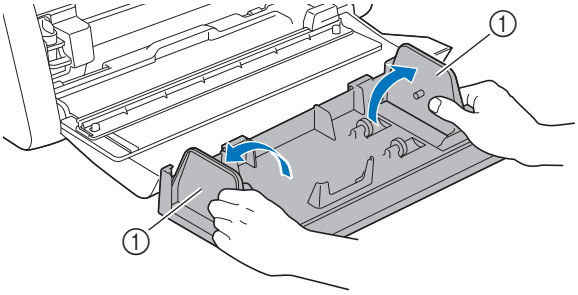

① Guide plate

Loading Material Into the Roll Feeder

1 **Insert the material so that the pin on the left guide plate fits into the paper core of the material, and then place the roll on the four support rollers.**
Be sure to load the material so that it unrolls from the top and the side to be cut faces up.

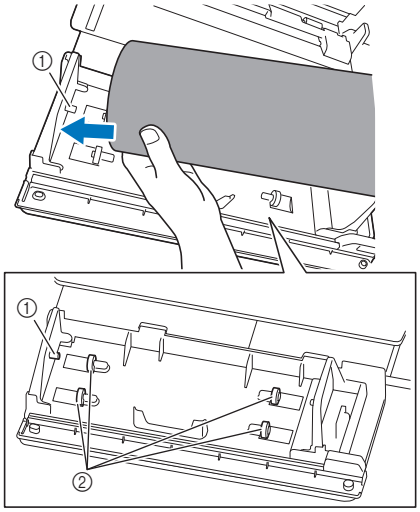

① Pin on guide plate

② Support rollers

2 While squeezing the adjustment lever, slide the right guide plate against the roll to correctly align the left edge of the material.

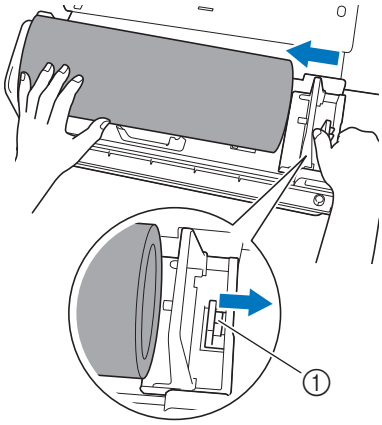

① Adjustment lever

Note

- The material is correctly loaded when there is a gap of about 2 to 3 mm between the guide plate and the right side of the roll. After aligning the left edge of the material, adjust the guide plate.

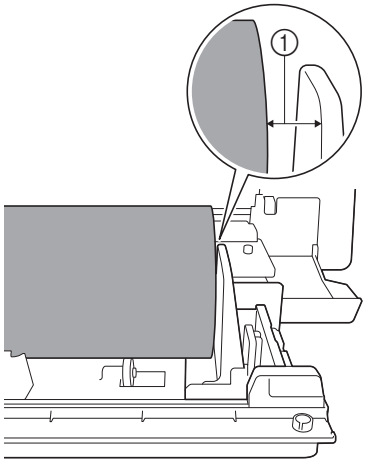

① Gap of about 2 to 3 mm

Checking the End of the Material

Make sure that the end of the material is evenly trimmed to meet all of the following conditions.

① It must be straight.

② The left and right edges of the material must be parallel.

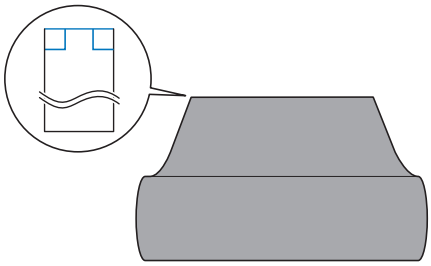

If the material does not meet both (① and ②) of the conditions described above, it may not be fed correctly.
Before feeding the material, be sure to check this.

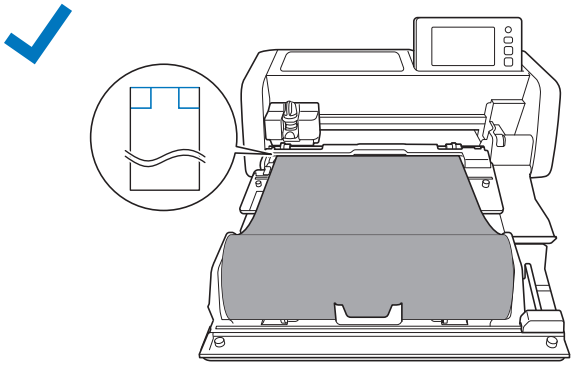

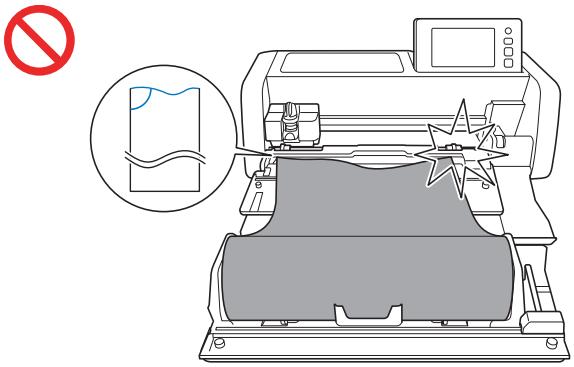

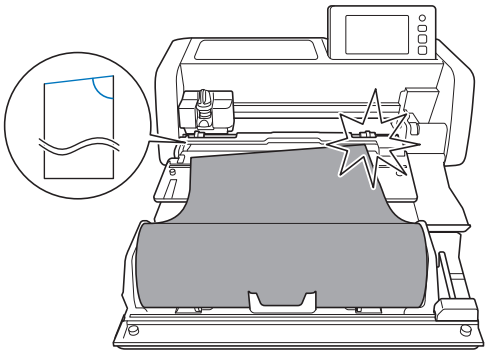

1 Pull the end of the material until it reaches the guide channel.

- Check that the side to be cut faces up.

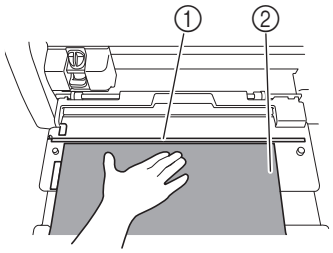

① Guide channel
② Material

2 Make sure the left edge of the material is aligned with the rolled material guide and the end of the material is perfectly aligned with the guide channel.

- When aligned
  The end of the material is perfectly aligned. There is no need to evenly trim the end of the material.

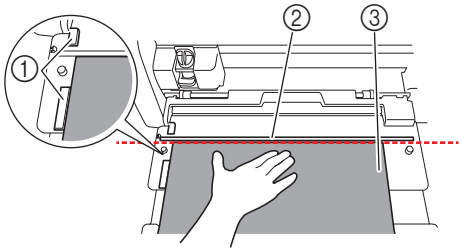

① Rolled material guide
② Guide channel
③ Material

▶ Feed the material into the machine. For details, see "Feeding the Material" on page 14.

- When not aligned
  The end of the material is not perfectly aligned. The end of the material must be evenly trimmed.

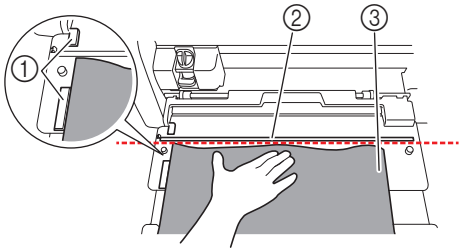

① Rolled material guide
② Guide channel
③ Material

▶ For details, see "Evenly Trimming the End of the Material" on page 12.

Evenly Trimming the End of the Material

1 Pull the end of the material until it extends past the guide channel.

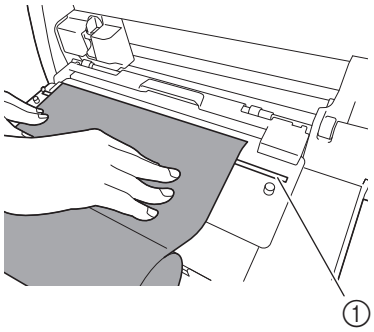

① Guide channel

2 Remove the trimmer from the roll holder.

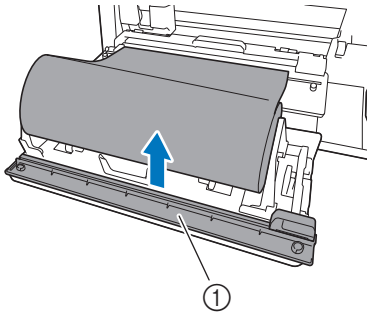

① Trimmer

3 Install the trimmer over the material.

Align the holes in the trimmer with the pins in the base attachment as shown below.

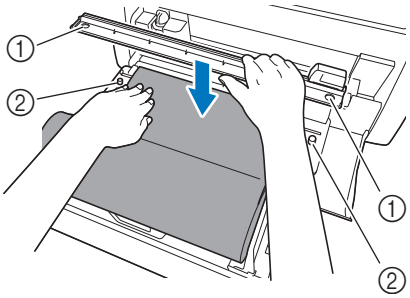

① Hole in trimmer
② Pin on base attachment

4 Align the left edge of the material with the rolled material guide.

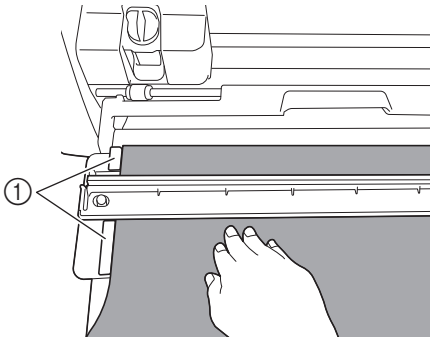

① Rolled material guide

5 Make sure that the trimmer blade is positioned at the right end of the trimmer.

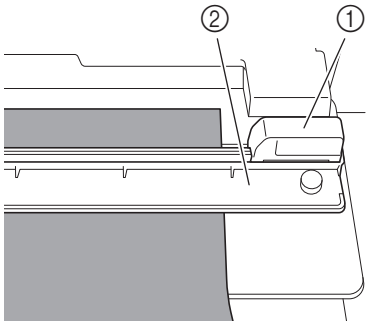

① Trimmer blade
② Trimmer

Note

- The trimmer blade can cut material only when it is slid from the right end of the trimmer. It cannot cut if it is slid from any location other than the right end.

6 While keeping the left edge of the material aligned with the rolled material guide, firmly press the trimmer down on the right side of the material. While holding them in place, slide the trimmer blade from right to left to cut off the material.

Slide the trimmer blade while pressing down gently.

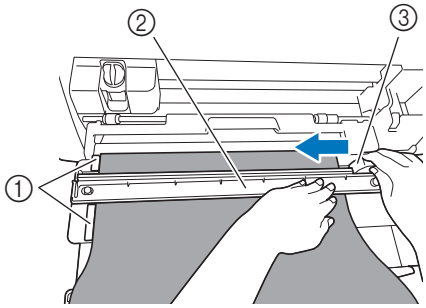

① Rolled material guide
② Trimmer
③ Trimmer blade

Note

If the material does not cut easily:

- If cutting does not start smoothly, for example, if the material catches on the blade, instead of sliding the blade with excessive force, refer to the following and try again. Sliding the trimmer blade with excessive force may cause damage.
  - If the material is not very pliable, firmly press the trimmer down on the right side of the material.
  - If the material is fairly pliable and has a strong curl, firmly press the trimmer down at the center.

7 Return the trimmer blade to the right end of the trimmer, and then remove the trimmer.

Remove any material that has been trimmed off.

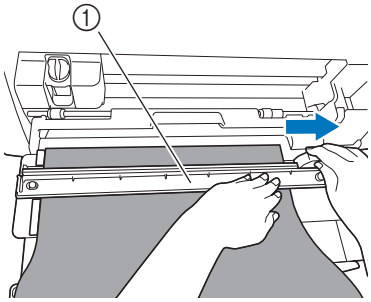

① Trimmer

Memo

- The removed trimmer can be stored at the front of the roll holder.

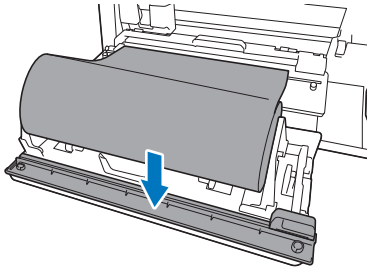

Feeding the Material

1 While keeping the left edge of the material aligned with the rolled material guide, lightly insert the material under the left and right feed rollers. While holding the material inserted under the feed rollers so that the material does not shift, press in the operation panel.

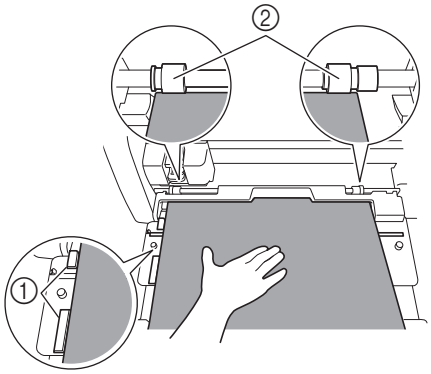

① Rolled material guide

② Feed rollers

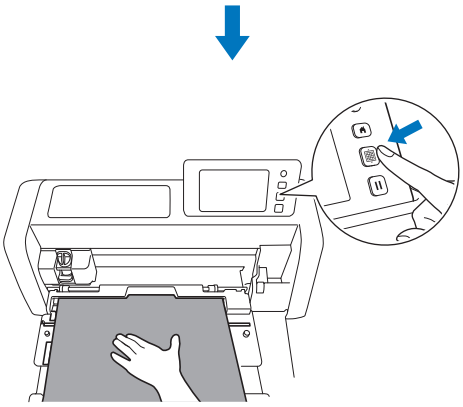

▶ When the material is fed into position, preparation of the roll feeder is completed. At this time, make sure that the left and right feed rollers completely pass over the material.

Memo

- If the material becomes jammed, remove any jammed material. For details, see “When Material Has Become Jammed in the Machine” on page 30.

Retrieving Roll Feeder Data On the Machine and Cutting

Retrieve data created in CanvasWorkspace (PC Version) on the cutting machine. When using a Disney pattern, retrieve it from the built-in patterns available on the cutting machine. From the cutting machine, data cannot be edited, and the scanning functions are not available.

Retrieving Data on the Machine

1 After selecting "Roll Feeder" in the home screen, select "Start to cut rolled material" in the screen shown below.

- For details on selecting "Roll Feeder" in the home screen, see steps 1 and 2 in "Installing the Base Attachment to the Machine" on page 9.
- After this point, touching [home] in any screen returns to the screen shown below.

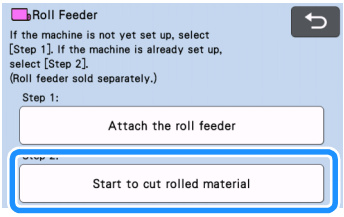

Memo

- Touching [back] in this screen or pressing [home] on the machine after material has already been fed in feeds out the material, then the home screen appears. If no material has been fed in, the home screen appears. To use the roll feeder to cut material, select "Roll Feeder" again.
- Data can be received if this screen appears on the machine while data is being transferred using a USB cable.

2 To retrieve data from a USB flash drive, insert the USB flash drive into the USB port (for a USB flash drive) on the cutting machine.

3 Select the location of the data to be retrieved, and then select the desired pattern.

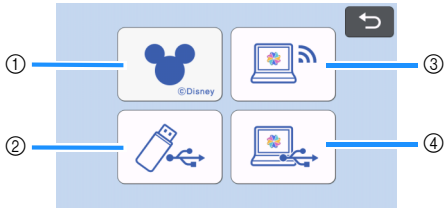

① Retrieve a built-in pattern (only Disney patterns for the roll feeder) from the cutting machine.

- Select the desired Disney pattern from the available categories. Regardless of the size of the pattern, an area of 610 mm (24") from the beginning of the pattern is displayed on the pattern selection screen.
- For details on the built-in Disney patterns for the roll feeder, refer to the "Disney Pattern List".
  Download the "Disney Pattern List" from the support website Brother Solutions Center (http://s.brother/cmoae/).

② Retrieve from a USB flash drive.

- If there are folders on the USB flash drive, touch a folder to display the list of patterns that it contains.
- If there are many folders or patterns, touch the arrows keys in the screen to scroll up or down.

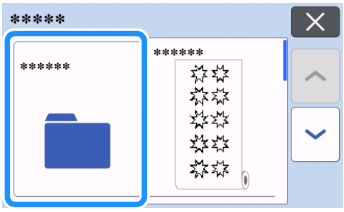

Memo

- It may take some time for the USB flash drive to be detected. Wait 5 to 6 seconds after inserting the USB flash drive before pressing a key. (The length of time differs depending on the USB flash drive.)
- When using a USB flash drive with an access indicator, wait until the indicator stops flashing.
- If an error is indicated, touch [usb] again.

▶ Touch the pattern to be retrieved to display a data confirmation screen.

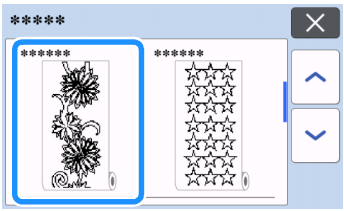

Memo

- Only data for a roll feeder is displayed.
- Regardless of the size of the pattern, an area of 610 mm (24") from the beginning of the pattern is displayed.

③ Retrieve from CanvasWorkspace (via a wireless network connection).

▶ A preview screen for the pattern layout appears. For details on the preview screen, see step 2 in "Cutting" on page 16.

④ Retrieve from CanvasWorkspace (using a USB cable).

▶ A preview screen for the pattern layout appears. For details on the preview screen, see step 2 in "Cutting" on page 16.

4 Confirm the data, and then touch the "OK" key.

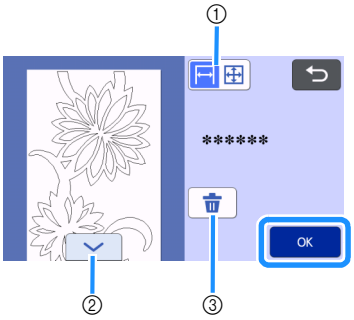

▶ When Disney pattern is retrieved, the following screen appears.

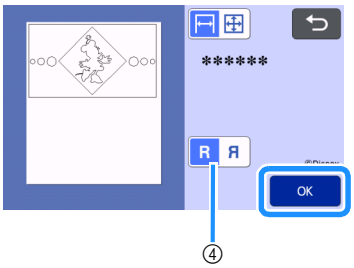

① Switch the pattern display.

Select ⊢⊣ to display the pattern enlarged to a 12-inch area.

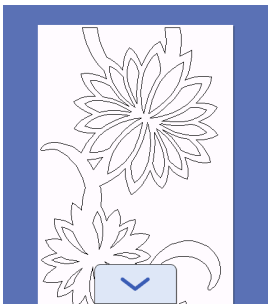

Select ⊞ to display the pattern reduced to show all of it.

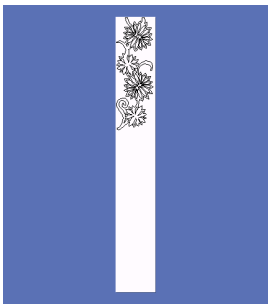

② Scroll down through the pattern

③ Delete the data

- It can not be selected when a Disney pattern has been retrieved.

④ Flip the pattern to create a mirror image. (Disney pattern only)
Switch the original pattern to its mirror image.
This is useful for image-transfer projects.

▶ The preview screen appears.

Memo

- When the pattern is displayed reduced, a maximum cutting length of 1,785 mm (70.3") is displayed, regardless of the size of the pattern. If the pattern is shorter than 1,785 mm (70.3"), the pattern will be displayed with space added; however, cutting will stop at the bottom of the pattern. The additional space will not be included in the cutting data.

Cutting

- Make sure that the auto blade holder has been installed in the carriage of the machine. For details on the blade holder that can be used, see "Blades That Can Be Used" on page 36.

1 Raise the scanner lever (on the left side of the machine) to "2".

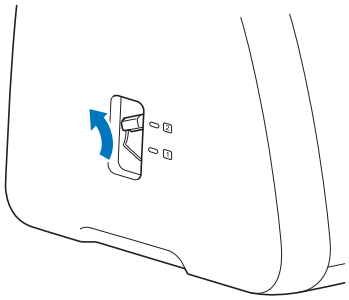

2 Select "Cut" in the preview screen.

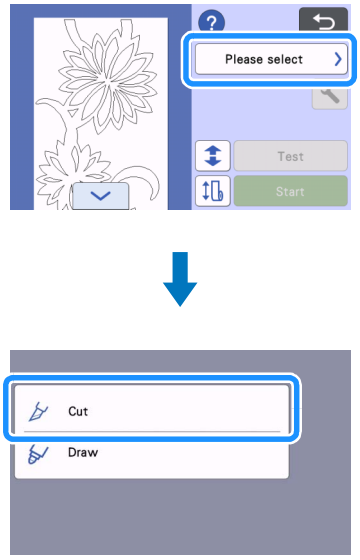

- Touch ? to confirm the instructions for installing the roll feeder.

3 To perform trial cutting, touch the "Test" key.

- In order to cut your project properly, perform trial cutting before cutting the pattern. For details, see "Trial Cutting" on page 18.

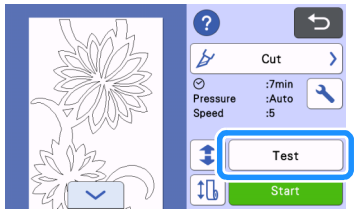

Memo

- When the roll feeder is used, half-cutting is automatically turned on. Touch 🔧 to check the settings. For details, see step 4 in "Changing the cut pressure setting" on page 19.

4 To perform trial feeding, touch .

- For details, see “Trial Feeding” on page 20.

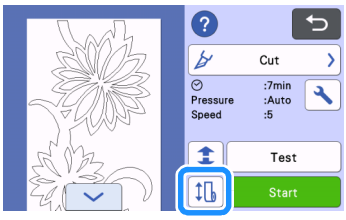

5 To change the cutting start position, touch .

- For details, see “Changing the Cutting Start Position” on page 21.

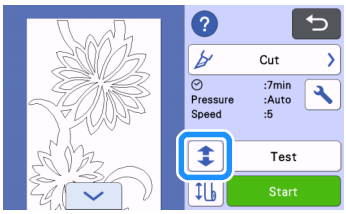

6 Touch the “Start” key to start cutting.

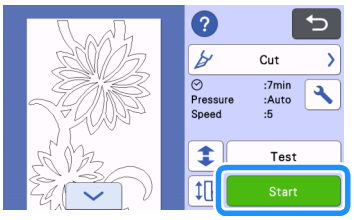

▶ When cutting is finished, the machine stops at the bottom of the pattern.

7 To cut off the material at the point where cutting stopped, select “Finish”.

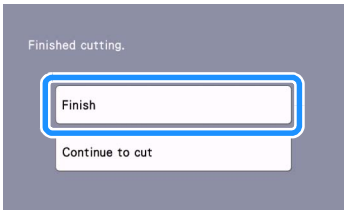

▶ Instructions for feeding the material appear. Confirm the details, and then touch the “OK” key.

▶ The material is fed until the bottom of the pattern reaches trimmer on the base attachment.

Memo

- To continue cutting additional patterns without cutting off the material, select “Continue to cut”. For details, see “Continuous Cutting” on page 22.

▶ Instructions for cutting off the material appear.

- Touch ? to confirm the instructions.

8 Install the trimmer over the material.

Align the holes in the trimmer with the pins in the base attachment.

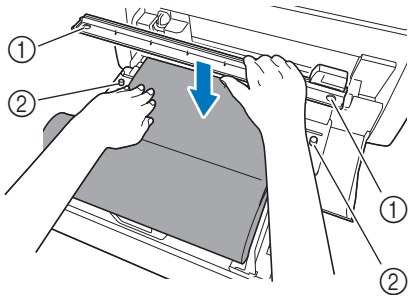

① Hole in trimmer

② Pin on base attachment

9 Firmly press the trimmer down on the right side of the material. While holding them in place, slide the trimmer blade from right to left to cut off the material.

Slide the trimmer blade while pressing down gently.

- This will create a cut leaving a 10 mm (0.4") margin at the bottom of the pattern.
- To stop the operation and feed out the material before cutting it off, press to feed the material out toward you.

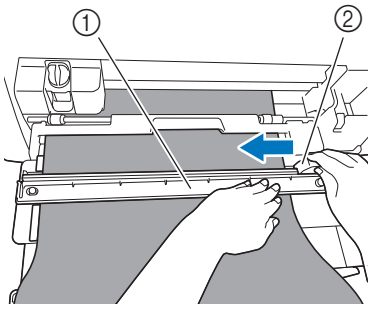

① Trimmer

② Trimmer blade

Note

If the material does not cut easily:

- If cutting does not start smoothly, for example, if the material catches on the blade, instead of sliding the blade with excessive force, refer to the following and try again. Sliding the trimmer blade with excessive force may cause damage.
  - If the material is not very pliable, firmly press the trimmer down on the right side of the material.
  - If the material is fairly pliable and has a strong curl, firmly press the trimmer down at the center.

10 After cutting off the material, confirm the instructions, and then touch the "OK" key.

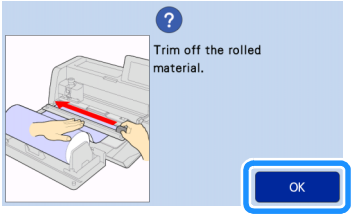

11 To feed out the cut-off material, touch the "OK" key.

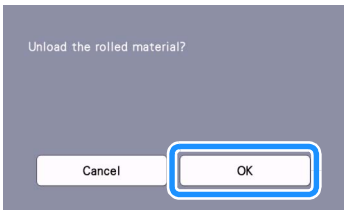

▶ The cut-off material feeds out from the back of the machine.

Trial Cutting

Perform trial cutting or drawing on the type of material to be used in your project, to check that the desired result can be achieved. This section describes the procedure for performing trial cutting.

1 Touch the "Test" key in the cutting screen.

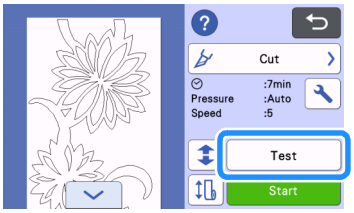

▶ A test pattern is automatically arranged in the test screen.

2 Make sure that the test pattern does not overlap the pattern for your project. To reposition the test pattern, touch [✥]. The test pattern can also be moved by dragging it in the screen.

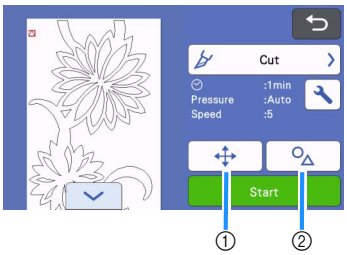

① Change the pattern arrangement.
Touch to make adjustments in the editing screen when changing the arrangement of the pattern.
If changes are applied to the pattern arrangement, the pattern will be automatically arranged in the same location the next time trial cutting is performed.

② Touch to adjust the pattern shape and size.
If changes are applied to the pattern shape and size, the pattern will be automatically arranged with the same shape and size the next time trial cutting is performed.

Memo

- As a default, the test pattern is arranged in the upper-left corner of the cutting area.
- In order to check the result of trial cutting while leaving the material fed in, the test pattern must be arranged lower than the default location.

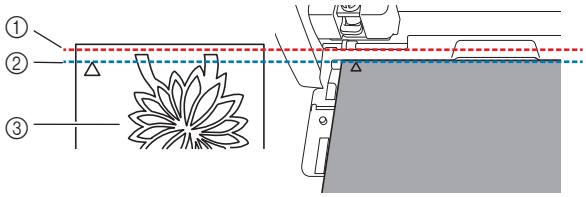

① Top edge of cutting area
② Line where trial cutting pattern is arranged as a default
③ Test preview screen

3 Touch the "Start" key to start cutting.

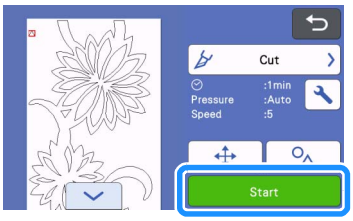

Memo

- When the roll feeder is used, half-cutting is automatically turned on.

▶ When cutting is finished, the following screen appears.

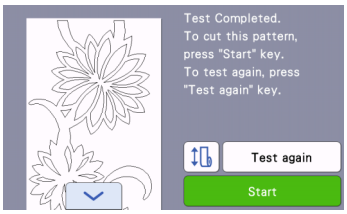

Check the results of trial cutting.
For details, see "Checking the Trial Cutting Results" on page 19.

- To start cutting the pattern for your project, press the "Start" key.
  When cutting is finished, see step 7 in "Cutting" on page 16.
- To perform trial cutting again, press the "Test again" key.
  For details, see "Changing the Cut Pressure Setting" on page 19.
- To perform trial feeding, press [ ].
  For details, see "Trial Feeding" on page 20.

■ Checking the Trial Cutting Results

Adjust the cutting pressure according to the trial cutting results. Repeatedly perform trial cutting and adjust the cutting pressure until the material is cut cleanly.

Note

- If the blade penetrates the material, faint cut marks may remain on the machine's surface where the blade makes contact (①). In that case, cutting may no longer be performed correctly. Contact Brother Customer Service or Brother authorized service center.

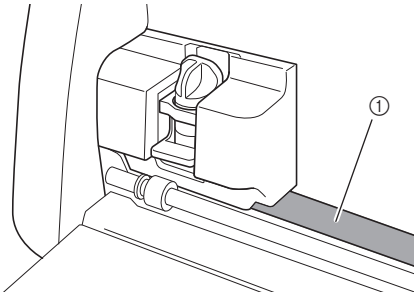

❑ Appropriate cutting pressure

The appropriate cutting pressure is when the surface layer of the material is cut cleanly and the backing paper is not cut.

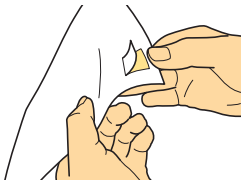

Memo

- The hook of the spatula and hook set (CASPHK 1) is useful for peeling off the half-cut material from the backing paper or backing film. To purchase the spatula and hook set (CASPHK 1), contact the retailer where this product was purchased.

■ Changing the Cut Pressure Setting

The appropriate cutting pressure for half-cuts is automatically set; however, some types of material may not be cut cleanly.
If the material could not be cut cleanly, refer to the following table, and adjust the setting for the cutting pressure. Since the blade may penetrate the material, perform trial cutting after each time that the setting is increased.

Trial cutting result	Adjustment
Part of the pattern is not cut.	Pressure too light: Touch [+] in the settings screen once to increase the pressure.
The entire pattern is not cut.	Pressure too light: Touch [+] in the settings screen once to increase the pressure.
There are deep cuts completely through the backing paper.	Pressure too strong: Touch [−] in the settings screen once to decrease the pressure.

❑ Changing the cut pressure setting

1 When the following screen appears after trial cutting is finished, touch the "Test again" key to display the test screen.

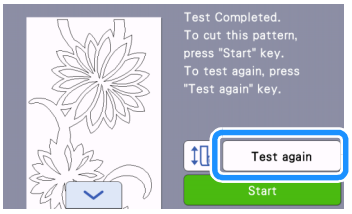

2 Touch [ ] to move the test pattern to a different location. The test pattern can also be moved by dragging it in the screen.

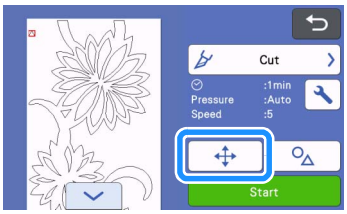

3 **Touch [🔧] in the test screen to display the settings screen.**

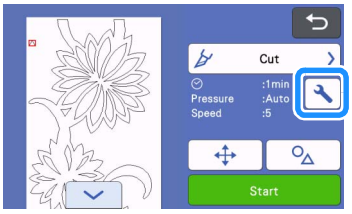

4 **Touch [+] or [−] to adjust the cutting pressure for half-cuts.**

- After adjusting the settings, touch the "OK" key.

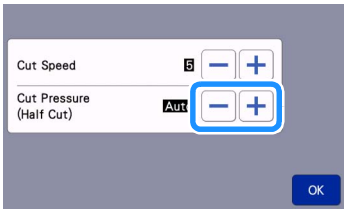

5 **Check that the settings have changed in the test screen, and then perform trial cutting again.**

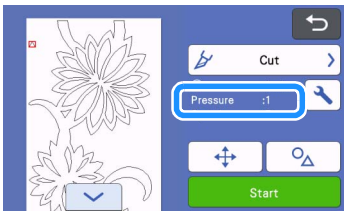

Note

- Be careful not to increase the pressure too much. Otherwise, the blade may break. If the pressure is too strong, the material may not be cut cleanly.

Trial Feeding

Before cutting, you can check if the material can be fed in straight and whether the length of the material is sufficient for the length of the cutting pattern. In order to check that the material can be fed without any problem, do not leave the machine during trial feeding.

Memo

- If the remaining length of material will be too short, remove the tape attaching the end of the material to the paper core provided there is one.

1 **Make sure that the scanner lever (on the left side of the machine) is raised to "2".**

For details, see "Cutting" on page 16.

2 **Touch [↕] in the cutting screen.**

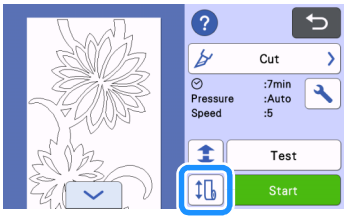

Memo

- This operation can also be performed by touching [↕] when the following screen appears after trial cutting is finished.

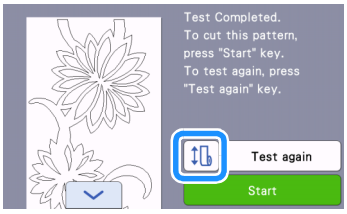

3 **Make sure that material is loaded into the machine. Press the "Start" key to start trial feeding.**

- For details, see "Feeding the Material" on page 14.

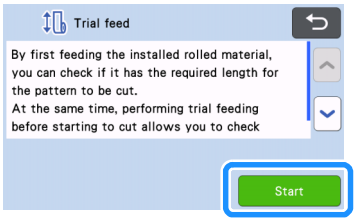

▶ The material is fed.

Memo

- If [II] is touched during trial feeding, feeding stops, and the following screen appears.

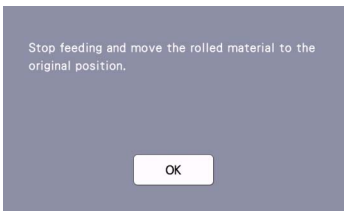

4 When trial feeding is finished, the following message appears. Touch the "OK" key to return to the previous screen.

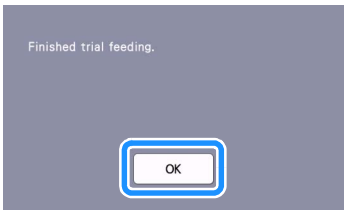

▶ If the length of the material is sufficient for the length of the cutting pattern, only material for the length of the pattern is fed, and then the material is fed back to the feeding start position.
If the length of the material is not sufficient for the length of the cutting pattern, the material is not fed back to the feeding start position.

Memo

- If the material becomes jammed in the machine, remove any jammed material. For details, see "When Material Has Become Jammed in the Machine" on page 30.
- If the material has a strong curl, it will not feed properly. In that case, flatten the curl in the material, and then load it again.

Changing the Cutting Start Position

The cutting start position can be moved up or down (in the feeding direction) to the desired location.

1 To change the cutting start position, touch .

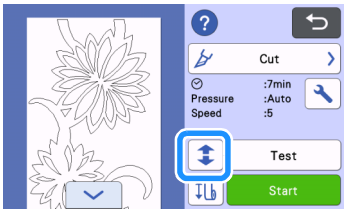

2 Touch or for the direction in which you want to move the material.

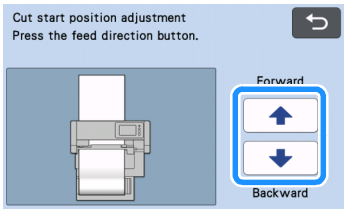

"Forward": The material is fed toward the back of the machine.

"Backward": The material is fed toward the front of the machine.

3 Touch to return to the screen in step 1.

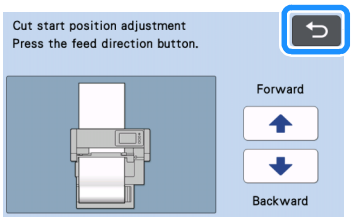

Note

- The material continues to be fed while or is held down.
- If the material is fed to the end while it is fed toward the back of the machine, the material will no longer be fed by the feed rollers. If the material is no longer fed by the feed roller, load it again. For details, see "Feeding the Material" on page 14.
- If the material is fed toward the front of the machine until the end of the material is directly under the feed rollers, feeding stops.

Continuous Cutting

After cutting a pattern, you can continue to cut either the same pattern or a different pattern without cutting off the material.

Note

- The maximum length (in the feeding direction) of the material that can be cut after loading is 1,785 mm (70.3")*. When cutting material longer than the specified length, cut off the material and feed it out, and then insert the material again to continue cutting.
  * This depends on the material and operating conditions specified by Brother.

■ Repeatedly Cutting the Same Pattern

1 Touch "Continue to cut".

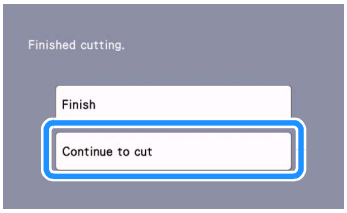

▶ The preview screen appears.

2 Select "Cut" in the preview screen, and then touch the "Start" key to start cutting.

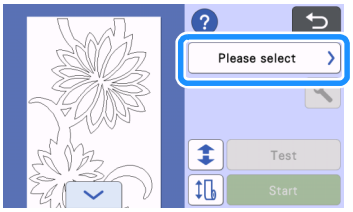

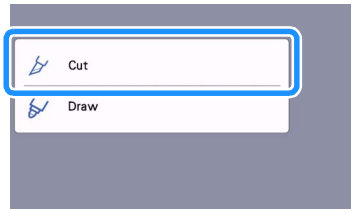

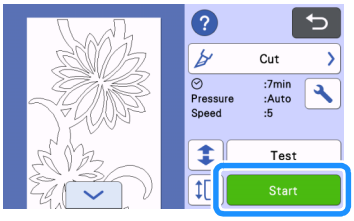

▶ The pattern that is displayed is cut.

▶ Cutting start from the bottom edge of the last pattern that was cut.

Memo

- To change the cutting start position, see "Changing the Cutting Start Position" on page 21.
- The cutting start position can also be adjusted by adding space at the beginning of the cutting data while it is being created. For details, see "Creating Cutting Data" on page 5.

■ Continuing To Cut With a Different Pattern

1 Touch "Continue to cut".

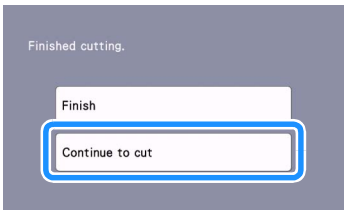

▶ The preview screen appears.

2 Touch ⮌ in the preview screen.

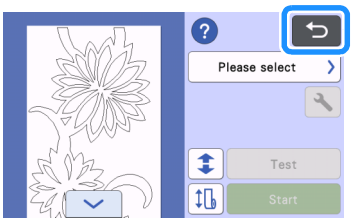

▶ When ⮌ is touched, the message "OK to delete data showing on the screen?" appears.
Touch the "OK" key.

3 Select "Start to cut rolled material", and then retrieve a different pattern.

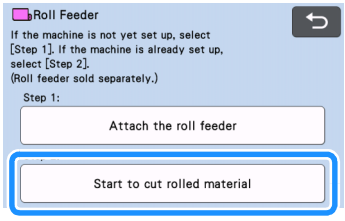

- For details, see "Retrieving Data on the Machine" on page 15.

Memo

- To change the cutting start position, see "Changing the Cutting Start Position" on page 21.
- The cutting start position can also be adjusted by adding space at the beginning of the cutting data while it is being created. For details, see "Creating Cutting Data" on page 5.

Removing the Roll Feeder To Feed Using a Mat

The roll feeder must be removed in order to attach material to a mat for cutting.

1 Lift up the base attachment to remove it from the machine.

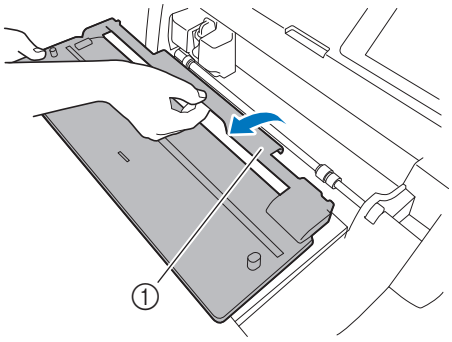

① Base attachment

2 Pull the feeder release lever (on the right side of the machine) toward you.

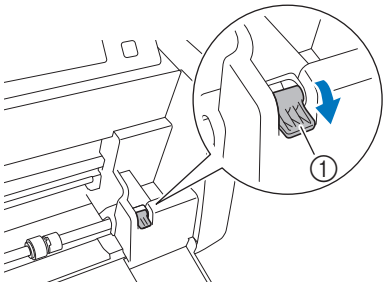

① Feeder release lever

▶ Only the right side of the shaft is raised, and the shaft is unlocked.

3 Grab the feed roller and feed roller lock dial, and then, while holding the feed roller in place, rotate the feed roller lock dial toward the back to the unlock position ( ).

▶ The feed roller can be slid.

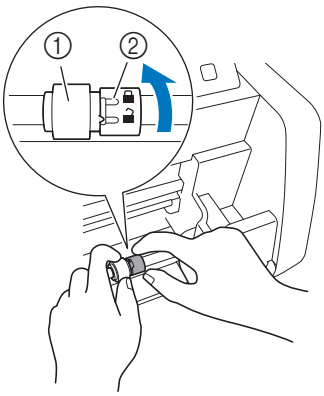

① Feed roller

② Feed roller lock dial

4 Slide the feed roller from to .

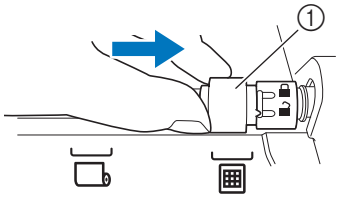

① Feed roller

5 Grab the feed roller and feed roller lock dial, and then, while holding the feed roller in place, rotate the feed roller lock dial toward you to the lock position ( ).

▶ The feed roller is locked in place.

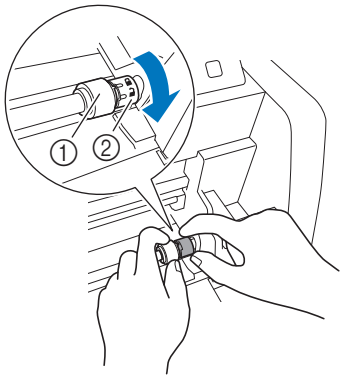

① Feed roller

② Feed roller lock dial

6 Return the feeder release lever (on the right side of the machine) to its original position.

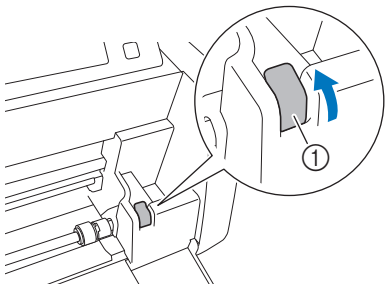

① Feeder release lever

▶ Only the right side of the shaft is lowered, and the shaft is locked.

7 **While squeezing the adjustment lever, slide the right guide plate.**

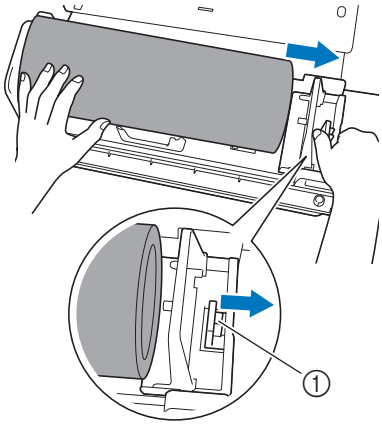

① Adjustment lever

8 **Remove the material, making sure that it does not catch on the pin on the guide plate of the roll holder.**

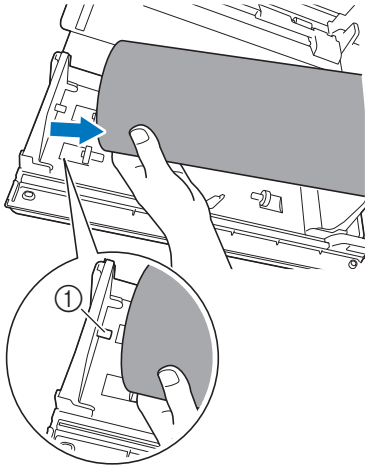

① Pin on guide plate

9 **Fold down the left and right guide plates on the roll holder.**

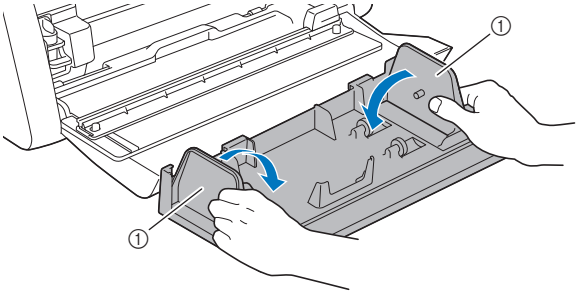

① Guide plate

10 **Lift up the roll holder to remove the hooks on the roll holder from the holes in the front cover.**

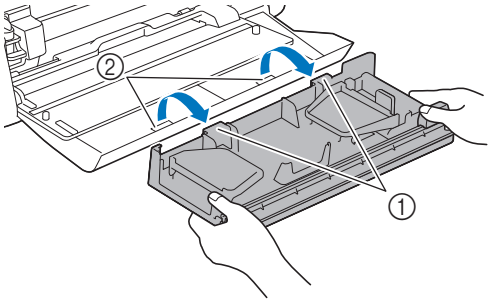

① Hooks on roll holder
② Holes in front tray cover

11 **Stack the base attachment, roll holder and trimmer to store them.**

- When carrying the roll holder, firmly support it from the bottom with both hands.

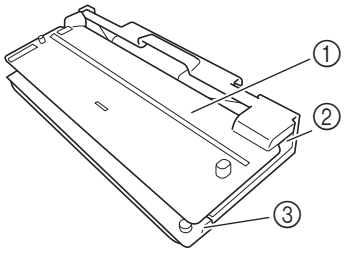

① Base attachment
② Roll holder
③ Trimmer

Replacement Criteria

For the safe operation of this machine, replace the following consumables according to the replacement criteria. To purchase parts, contact the retailer where this product was purchased or the nearest Brother authorized service center. For details on optional accessories, refer to the Operation Manual for the cutting machine, or see page 2 in this manual.

Cutting Blade

Replace when:

- the cuts in the material become rough, reducing the quality of the finished product
- the cutting edge becomes dull
- the blade is chipped (If cutting is not possible even though the cutting pressure is set higher, the blade may be chipped.)

For details on replacing the blade or cleaning the holder, refer to the Operation Manual for the cutting machine.

Trimmer Blade

Replace when:

- the cuts in the material become rough or the material cannot be cleanly cut off
- the cutting edge becomes dull
- the blade is chipped

Memo

- Do not disassemble the trimmer blade.

Replacing the Trimmer Blade

■ Removing the Trimmer Blade

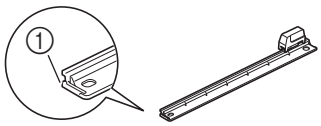

① Stopper

1 Lightly push back on the stopper at the left end of the trimmer.

▶ The stopper will be shifted downward so that the trimmer blade can be removed from the trimmer.

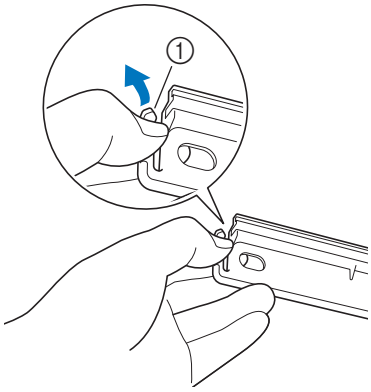

① Stopper

Memo

- Do not push on the stopper with force. Otherwise, damage may result.

2 Slide the trimmer blade to the left end to remove it from the trimmer.

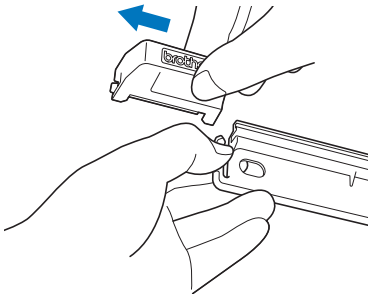

■ Installing the Trimmer Blade

Trimmer blade correctly installed

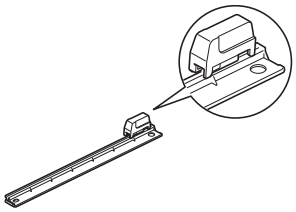

1 Lightly push back on the stopper at the left end of the trimmer.

▶ The stopper will be shifted downward so that the trimmer blade can be installed onto the trimmer.

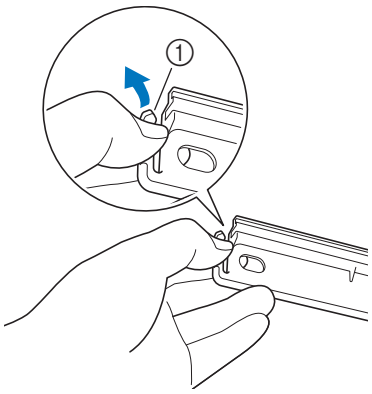

① Stopper

2 Hold the trimmer blade as shown below, and then fit the tab on the right side onto the rail of the trimmer.

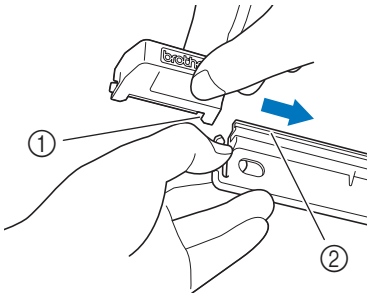

① Tab on trimmer blade
② Rail

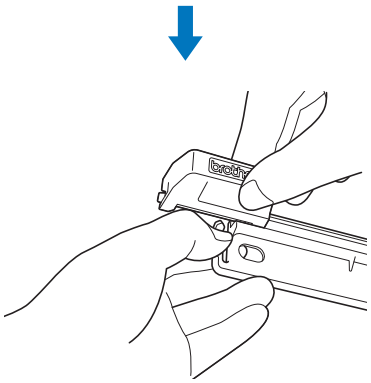

3 Fit the tab on the left side onto the rail of the trimmer.

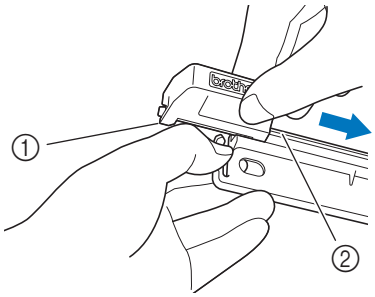

① Tab on trimmer blade
② Rail

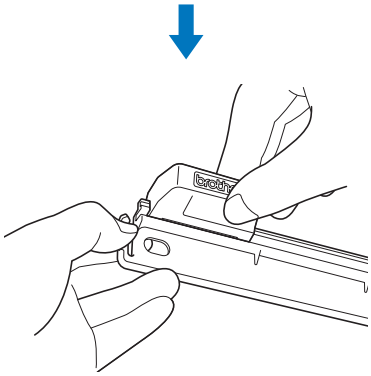

4 Slide the trimmer blade to the right end.

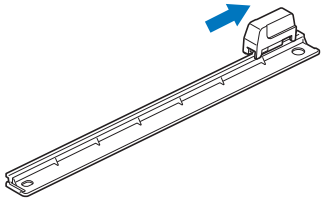

Cleaning the Trimmer Blade

If material debris, lint or dust accumulates inside the trimmer blade, it may no longer cut material. Periodically clean the trimmer blade.

Memo

- Do not disassemble the trimmer blade.

1 Remove the trimmer blade from the trimmer.

- For details, refer to the procedure in “Removing the Trimmer Blade” on page 25.

2 Using a commercially available brush, clean off debris, lint and dust.

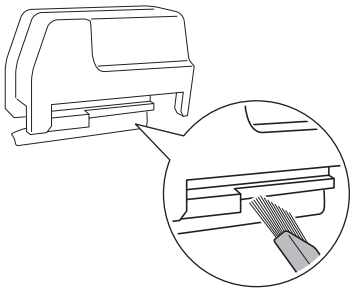

3 Install the trimmer blade onto the trimmer.

- For details, refer to the procedure in “Installing the Trimmer Blade” on page 26.

Troubleshooting

If the machine stops operating correctly, check the following possible problems as well as the FAQ on the Brother Solutions Center (http://s.brother/cpoac/) before requesting service. If the problem persists, contact Brother Customer Service or Brother authorized service center. An asterisk (*) listed as a reference page indicates the Operation Manual for the cutting machine. For wireless network troubleshooting, refer to the Wireless Network Setup Guide for the cutting machine.

Material

Symptom	Possible cause (or result)	Solution	Reference
The material cannot be inserted.	When the material was inserted, it was not placed under the feed rollers.	Insert the material so that it is placed under the left and right feed rollers.	→ page 14
	was not used to insert the material.	Lightly insert the material into the feed slot, and then press .	→ page 14
	The feed roller is not correctly positioned.	Adjust the position of the feed roller.	→ page 9
	The shaft is unlocked.	Lock the shaft.	→ page 10
	“Roll Feeder” was not selected in the home screen.	Select “Roll Feeder” in the home screen.	→ page 9
The material is not fed in straight.	The end of the material is not evenly trimmed.	Evenly trim the end of the material.	→ page 12
	The material was inserted into the feed slot at an angle.	Align the left edge of the material with the rolled material guide, and then insert the material straight into the feed slot.	→ page 14
	The material is not appropriately secured by the guide plates.	Firmly secure the material with the guide plates.	→ page 11
	The rear tray is not pulled out.	Pull out the rear tray.	→ *
	The feed roller is not correctly positioned.	Adjust the position of the feed roller.	→ page 9
The material cannot be fed.	There is an obstruction around the slot of the machine.	Maintain space around the slot of the machine so that the material can be fed out.	–
	The machine is installed on a surface that is not level.	Place the machine on a level, even surface.	–
The material cannot be fed out.	The material to be cut is jammed in the feeding mechanism in the machine.	Remove any jammed material according to the procedures in “When Material Has Become Jammed in the Machine” on page 30.	→ page 30
	After cutting off the material, the material being fed out was too short and remained in the machine.	Remove any material that could not be fed out and stayed in the machine.	→ page 31
The material became jammed.	The material was not fed straight.	Remove any jammed material according to the procedures in “When Material Has Become Jammed in the Machine” on page 30. After evenly trimming the end of the material, feed the material in straight.	→ page 30 → page 12 → page 14
The material moves to an unintended position.	- The cutting start position was unintentionally changed. - The appropriate operation was not selected after the pattern was cut.	Change the cutting start position to move the material to the desired position. Press in the operation panel to feed out the material toward you.	→ page 21

* For details, refer to the Operation Manual for the cutting machine.

Cutting

Symptom	Possible cause (or result)	Solution	Reference
The material being cut catches on the tip of the blade.	Lint or dust has accumulated in the holder.	Clean the holder.	→ *
	The blade is worn.	Replace the blade with a new one.	→ *
	The material being cut is incompatible with this machine.	Replace the material with one compatible with this machine.	→ page 33 → page 34
The machine stopped while an operation is being performed.	For safety, the machine stops operating if a button in the operation panel is pressed while cutting.	Follow the instructions in the message that appears in the screen. Touch the “OK” key to move the carriage to its initial position. Insert the material and perform the operation again.	–
Not all of the material to be cut is cut. Some areas remain uncut.	A blade incompatible with the material is being used.	Replace the blade with one compatible with the material.	→ *
	If cutting is not possible even though the cutting pressure is set higher, the blade may be chipped.	Replace the blade with a new one.	→ *
	The blade is worn.	Replace the blade with a new one.	→ *
	The material is incompatible with this machine.	Replace the material with one compatible with this machine.	→ page 33 → page 34
	The cutting pressure (“Cut Pressure (Half Cut)”) is incorrect.	Adjust the setting for “Cut Pressure (Half Cut)” in the settings screen.	→ page 19
	Lint or dust has accumulated in the holder.	Clean the holder.	→ *
There are deep cuts completely through the backing paper of the material.	The cutting pressure (“Cut Pressure (Half Cut)”) is incorrect.	Adjust the setting for “Cut Pressure (Half Cut)” in the settings screen.	→ page 19
The material cannot be cleanly cut.	If the blade penetrates the material, faint cut marks may remain on the machine's surface where the blade makes contact (①). 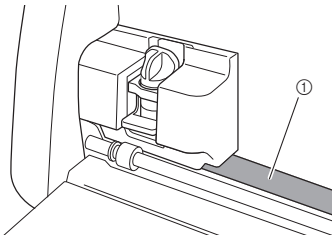 	Contact Brother Customer Service or Brother authorized service center.	–

* For details, refer to the Operation Manual for the cutting machine.

Trimmer blade

Symptom	Possible cause (or result)	Solution	Reference
The material is not being cleanly cut by the trimmer blade.	Before starting to cut, the material and trimmer were not firmly pressed down with your hand.	Firmly press down the material and trimmer with your hand, and then start cutting.	→ page 13 → page 17
	Lint or dust has accumulated in the trimmer blade.	Clean the trimmer blade.	→ page 27
	The trimmer blade is worn.	Replace the trimmer blade with a new one.	→ page 25
The trimmer blade has been removed from the trimmer.	The trimmer blade was slid past the stopper on the trimmer.	Follow the installation instructions to install the trimmer blade.	→ page 26

When Material Has Become Jammed in the Machine

1 Press ⏻ in the operation panel to turn off the machine.

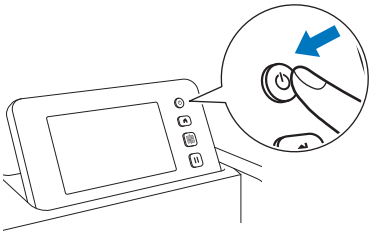

2 Unplug the power cord from the electrical outlet.

3 Remove the base attachment from the shaft.

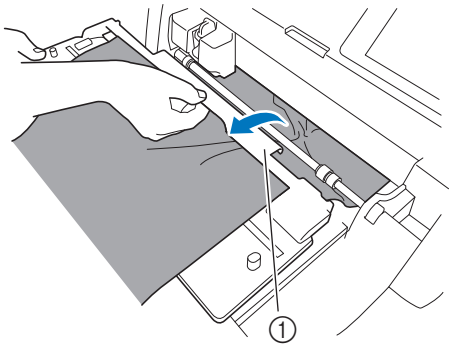

① Base attachment

4 Pull the feeder release lever (on the right side of the machine) toward you.

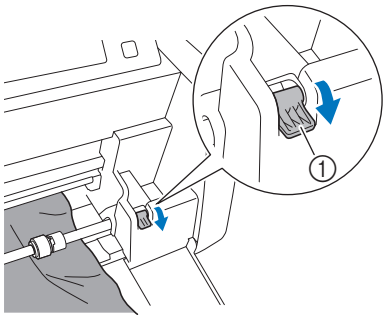

① Feeder release lever

▶ Only the right side of the shaft is raised, and the shaft is unlocked. This allows jammed material to easily be removed.

5 Remove any jammed material.

- Slowly pull out the material. Otherwise, internal machine parts may be damaged.

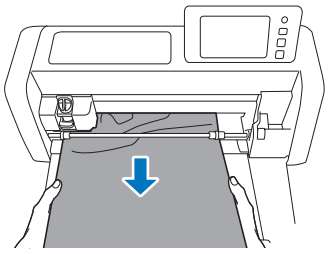

Note

- If material gets under the carriage and cannot be removed, make sure that the machine is turned off, remove the holder from the carriage, and then slowly move the carriage by hand to remove the material.

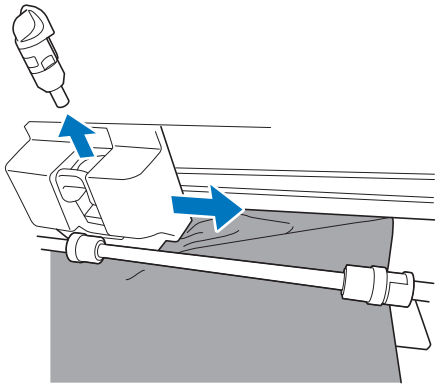

6 Return the feeder release lever (on the right side of the machine) to its original position.

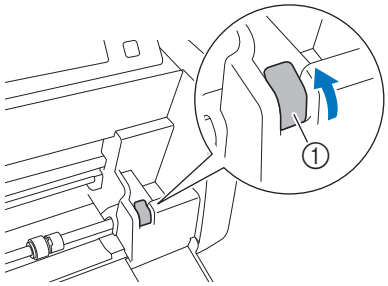

① Feeder release lever

▶ Only the right side of the shaft is lowered, and the shaft is locked.

7 Install the base attachment onto the shaft.

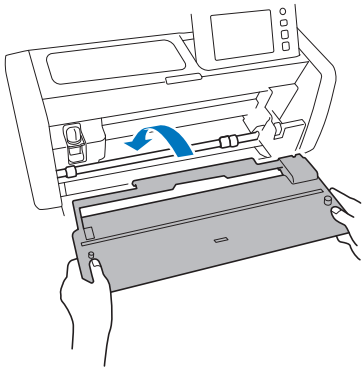

8 Insert the plug of the power cord into an electrical outlet.

9 Press ⏻ in the operation panel.

When the opening screen appears, touch anywhere on the display.

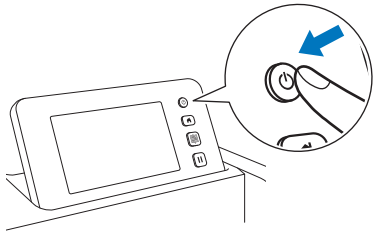

■ When Jammed Material Cannot Be Removed

Cut-off material may not feed out from the back of the machine. Follow the procedure below to remove any jammed material.

Note

- After cutting off material with the trimmer blade, material being fed out to the back of the machine may be too short and remain in the machine.

1. **Press ⏻ in the operation panel to turn off the machine.**
2. **Unplug the power cord from the electrical outlet.**
3. **Completely remove the rear tray from the machine.**
   - For details on removing the rear tray, refer to the Operation Manual for the cutting machine.
4. **Remove any jammed material.**

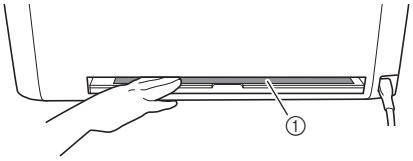

① Jammed material

5. **Install the rear tray onto the machine.**
   - For details on installing the rear tray, refer to the Operation Manual for the cutting machine.
6. **Insert the plug of the power cord into an electrical outlet.**
7. **Press ⏻ in the operation panel.**

   When the opening screen appears, touch anywhere on the display.

Error Messages

The following table lists some of the messages that may appear while the machine is operating as well as their corresponding solutions.
Perform the necessary operation according to the instructions in the message or the solution described here. If the problem persists, contact Brother Customer Service or Brother authorized service center.

Cutting Machine Error Messages

Error message (cutting machine)	Cause/solution
The data cannot be read. Select [Roll Feeder] from home screen to use this data.	The procedure for retrieving roll feeder data was incorrectly performed. Follow the correct procedure to retrieve data. (page 15)
Rolled material is not loaded. Press in the operation panel to load a rolled material.	Material has not been inserted. After inserting the material, touch the “Start” key. (page 14)
Rolled material is not loaded correctly. The rolled material will unload.	Material was not fed correctly while cutting/drawing. Align the left edge of the material with the rolled material guide, and then insert the material straight into the feed slot. (page 14)
The feeder release lever is released. Lock the feeder release lever.	The feeder release lever (on the right side of the machine) remained pulled down toward you. Push the feeder release lever back up to lock the shaft, and then press to feed in the material. (page 10)
Cannot read the data. Get the PIN code again and register to the machine.	- This message appears when you try to transfer data with a machine different than the one registered with CanvasWorkspace. - The registration of your machine has been canceled from CanvasWorkspace. Register the machine again.
Cannot save the data. Get the PIN code again and register to the machine.	
The data cannot be deleted.	The USB flash drive being used may not be usable with this machine. If removing the USB flash drive and performing the operation again causes the message to appear again, replace the USB flash drive. For information on USB flash drives compatible with this machine, visit our website (http://s.brother/cpoac/).
The data cannot be read.	

CanvasWorkspace Error Messages

Error message (CanvasWorkspace)	Cause/solution
Operation not allowed. The grouping of objects already includes 3 levels of grouped objects. (E93001)	Three layers are already grouped when the weeding box is being applied. The weeding box will be grouped together with the original object. Since more than three layers cannot be grouped, ungroup the object to which the weeding box will be applied, and then apply the weeding box.
The entered size may be smaller than the selected object. Would you like to place it as is? (N93001)	When a weeding box is being applied, the size specified for it is smaller than the size of the original object. Since the cutting lines for the weeding box will overlap those for the original object, specify a weeding box size larger than the size of the selected object.

Roll Feeder Usage

For use with adhesive craft vinyl and iron-on transfer material in a rolled format. Rolled material should have a backing and the machine can recognize half-cuts.
Rolled material can be fed directly into the machine (without attaching it to a mat) and cut. With this attachment holding the material, it can be steadily unroll and properly fed. Using the roll feeder eliminates the need to attach the material to a mat, making it possible to cut long patterns or cut multiple patterns continuously and efficiently.
The roll feeder is specially designed for the ScanNCut DX. It cannot be used with any model other than the ScanNCut DX.
In order to use the roll feeder function, the dedicated application CanvasWorkspace (PC Version) must be installed on your computer and used to edit the pattern.

Compatible Materials

Half-cutting must be performed to cut material without attaching it to a mat. (Half-cuts are also sometimes called “kiss cuts”.)
Half-cutting is the process of cutting only the adhesive-backed layer of double-layered material (typically adhesive craft vinyl or iron-on transfer material*), leaving the backing layer such as backing paper or backing film uncut. Therefore, only materials that can be half-cut can be cut with a cutting machine equipped with the roll feeder. Materials without a backing layer (thermal paper, rolled sketch paper, etc.) cannot be cut with this attachment. Instead of using the roll feeder, attach these types of materials to the mat to cut them.

* Roll Feeder Attachment: For use with **select** iron-on materials.

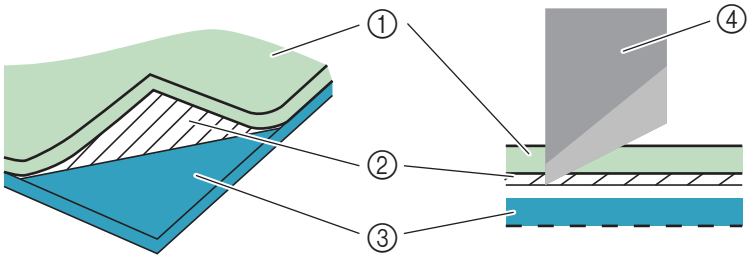

① **Adhesive-backed layer**
② **Adhesive**
③ **Backing layer**
④ **Blade**

Examples of Materials That Can Be Used

- Adhesive craft vinyl

This adhesive-backed sheet material is used to decorate signboards, window glass, walls or vehicles. The material consists of two layers: an adhesive-backed sheet and backing (paper or film). After using the cutting machine to cut out your pattern, such as text or a logo, from only the adhesive-backed layer, attach the pattern directly onto the wall, vehicle or other surface.

* Test a small area on the surface before adhering the adhesive craft vinyl to avoid damage.

Applying the Adhesive Craft Vinyl to the Surface

Half-cut the desired pattern with the cutting machine.

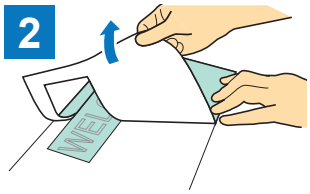

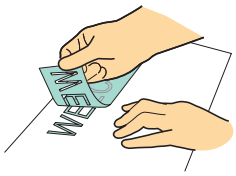

Peel off any excess, leaving only the pattern on the backing. (Weeding)

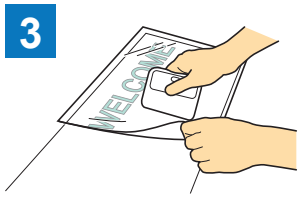

Attach the application sheet *1 to the area of the backing where the pattern remains. (*2)

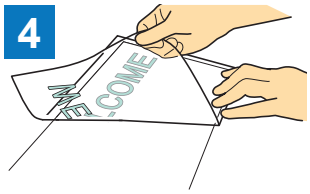

Transfer the cut-out patterns to the application sheet so that they remain correctly arranged.

After wiping the target surface clean, attach the adhesive craft vinyl cutouts with the application sheet. (*2)

Finally, peel off only the application sheet.

*1 The application sheet (also called a transfer paper or retack sheet) is a low-tack sheet used for attaching the adhesive craft vinyl to the target surface. Use this sheet together with adhesive craft vinyl.

*2 Use the scraper (CASCP1) or brayer (CABRY1) for attaching the application sheet and for transferring the adhesive craft vinyl cutouts to the target surface. To purchase a scraper (CASCP1) or brayer (CABRY1), contact the retailer where this product was purchased.

- Iron-On Transfer Material

Iron-on transfer material is used for heat transferring patterns onto fabric such as T-shirts and sweatshirts. The material consists of two layers: a thermo-softening adhesive sheet and carrier sheet (paper or film). After using the cutting machine to cut out your pattern, such as text or a logo, from only the thermo-softening adhesive sheet, attach the pattern to the target surface by pressing down on the backing with a heat press or iron.

* Please refer to the manufacturer's instructions included with the iron-on transfer material.

Applying the Iron-On Transfer Material to the Surface

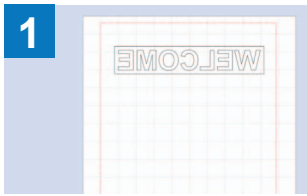

Create your pattern in CanvasWorkspace.
Make sure that the pattern is flipped to create a mirror image. For details, refer to the Operation Manual for the cutting machine.

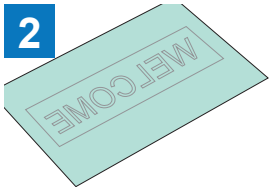

Half-cut the desired pattern with the cutting machine. (*1)

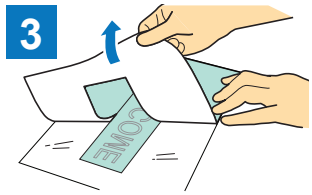

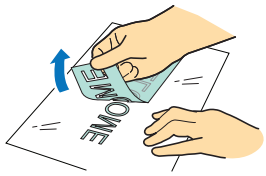

Peel off any excess, leaving only the pattern on the backing. (Weeding)

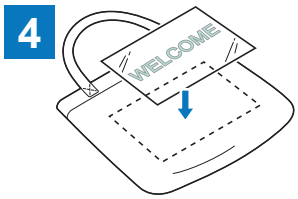

With the backing facing up, place the sheet cut in step ③ onto the target surface such as fabric (*2).

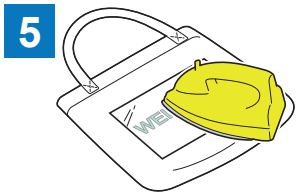

Transfer the pattern with a heat press or iron. (*3)

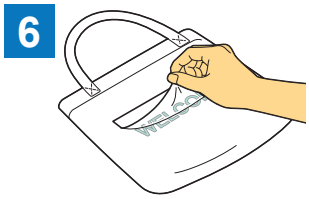

Peel off only the backing.

*1 When loading a roll of iron-on transfer sheet material into a cutting machine installed with the roll feeder, make sure that the material is correctly oriented. (page 35)

*2 First check that an iron-on transfer can be applied to the target surface.

*3 The heat transfer conditions (temperature, pressing time, etc.) differ depending on the material being used. Use the material according to the manual included with it.

Non-Compatible Material

The following material cannot be used, even if it has backing paper or backing film. The material may separate and cause jamming during cutting.

■ Material whose end curls upward when the roll is loaded with the backing paper or backing film facing down

Be sure to check this when using iron-on transfer material.
If the end of the material curls upward, cut it to the appropriate size, and then attach it to a mat.

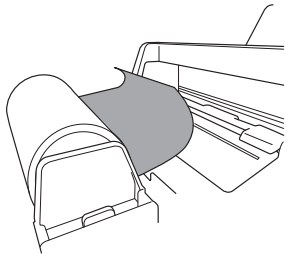

▶ Otherwise, the material may become jammed in the machine.

Note

- If the rolled iron-on material is 610 mm (24") long or shorter, we recommend you use our 12" × 24" (305 mm × 610 mm) optional cutting mat.
- If the rolled material is longer than 610 mm (24"), cut into 610 mm (24") long or shorter, then use our 12" × 24" (305 mm × 610 mm) optional cutting mat.

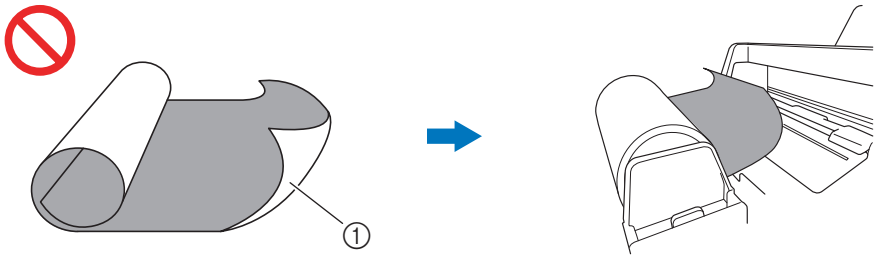

When the end of the material curls upward, it will not feed correctly.

① Rolled with the backing paper (backing film) on the outside

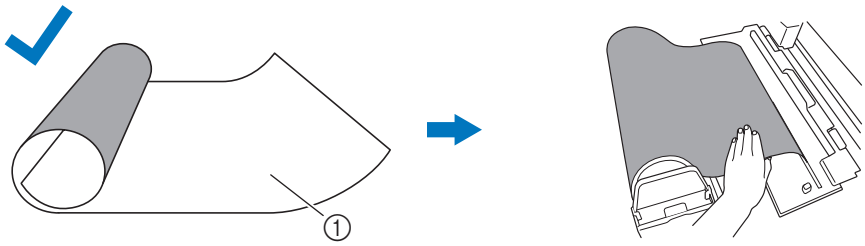

When the end of the material is flat or curls downward, it will feed correctly.

① Rolled with the backing paper (backing film) on the inside

■ Material whose left and right edges are not parallel

- Left and right edges are not parallel.

While the material feeds, it loses contact with a feed roller, causing the material to become skewed and feed incorrectly.

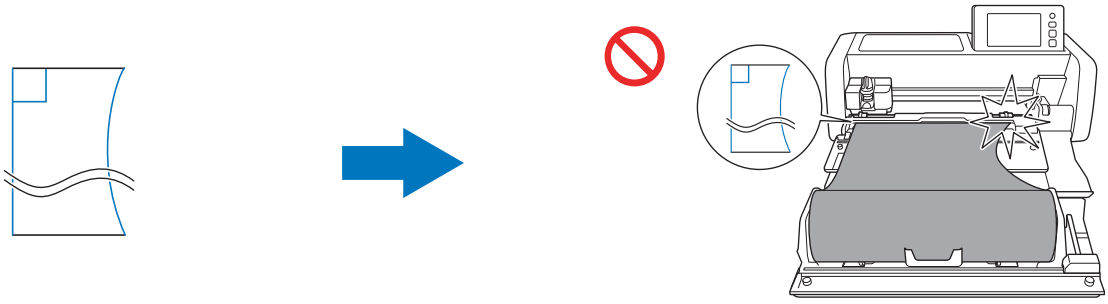

- Left and right edges are parallel.

The material feeds correctly.

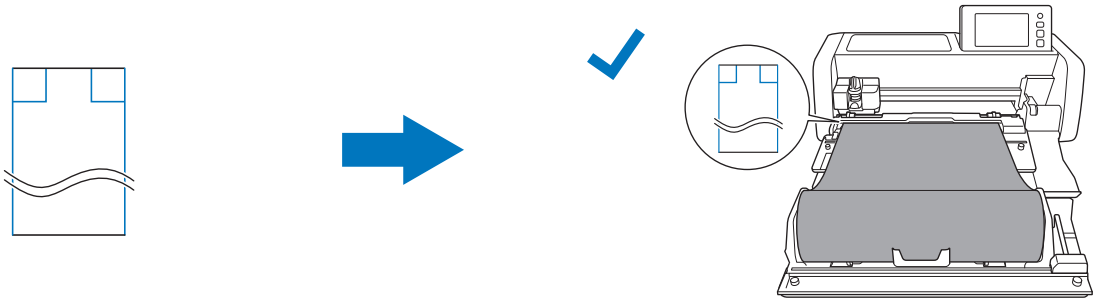

Sizes of Rolled Material That Can Be Loaded Into the Roll Feeder

Rolled material of the following sizes can be loaded into the roll feeder.

① Material width *1	305 mm (12")
② Roll diameter	39 mm – 115 mm (1.5" – 4.5")
③ Outer diameter of paper core *2	42 mm – 115 mm (1.7" – 4.5")
④ Inner diameter of paper core *2	39 mm – 115 mm (1.5" – 4.5")
⑤ Thickness of rolled material *3	0 mm – 21 mm (0" – 0.8")
⑥ Material thickness (including backing paper or backing film)	0.21 mm – 0.35 mm

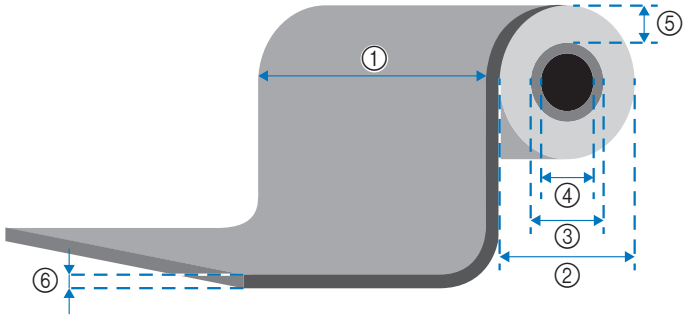

*1 The maximum width of the cutting area is 251.8 mm (9.9"). Certain areas on the left and right of the material cannot be cut.
*2 For material with a paper core
*3 The maximum length (in the feeding direction) of the cutting area is 1,785 mm (70.3"). (For details, see “Continuous Cutting” on page 22.) If the length (in the feeding direction) of the material remaining on the roll is 305 mm (12") or less or if the material sheet size is 305 mm x 305 mm (12" x 12") or less, attach it to a mat to feed and cut it.

Blades That Can Be Used

When cutting using the roll feeder (without using the mat), half-cutting is automatically performed. When using the roll feeder, use the auto blade holder and the auto blade.
When using the auto blade holder and auto blade, perform trial cutting with the same material to be used in your project to check that the material can be cleanly cut. If automatic half-cutting is not performed correctly, the cutting pressure can be manually adjusted. For details on adjusting the cutting pressure, see “Changing the Cut Pressure Setting” on page 19.

Scanner Lever Position

When material is fed, it may hit the machine’s feeding mechanism and not be fed correctly. When cutting using the roll feeder, raise the scanner lever (on the left side of the machine) to “2”.

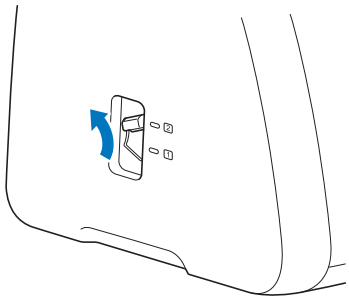

English
Version 0